BOARD OF APPEALS, CITY & COUNTY OF SAN FRANCISCO

Appeal of
ZHIMIN LI,)
Appellant(s))
)
vs.)
)
DEPARTMENT OF BUILDING INSPECTION,)
PLANNING DEPARTMENT APPROVAL Respondent

Appeal No. **22-070**

NOTICE OF APPEAL

NOTICE IS HEREBY GIVEN THAT on October 11, 2022, the above named appellant(s) filed an appeal with the Board of Appeals of the City and County of San Francisco from the decision or order of the above named department(s), commission, or officer.

The substance or effect of the decision or order appealed from is the ISSUANCE on September 23, 2022 to Gerardo Corpuz and Mary Allison, of an Alteration Permit (in response to Notice of Violation No. 202292465: legalize the construction of structure existing deck at rear yard which exceeds 8 feet in height and 100 square feet in area; new deck is approximately 6 by 9 feet) at 175 Southwood Drive.

APPLICATION NO. 2022/0722/9084

FOR HEARING ON November 16, 2022

Address of Appellant(s):	Address of Other Parties:
Zhimin Li, Appellant(s) 626 Faxon Avenue San Francisco, CA 94112	Gerardo Corpuz, Mary Allison, Permit Holder(s) c/o Juan-Manuel Duque, Agent for Permit Holder(s) 1315 Laguna Street San Francisco, CA 94115

Date Filed: October 11, 2022

CITY & COUNTY OF SAN FRANCISCO
BOARD OF APPEALS

PRELIMINARY STATEMENT FOR APPEAL NO. 22-070

I / We, **Zhimin Li**, hereby appeal the following departmental action: **ISSUANCE** of **Alteration Permit No. 2022/0722/9084** by the **Department of Building Inspection** which was issued or became effective on: **September 23, 2022**, to: **Gerardo Corpuz and Mary Allison,** for the property located at: **175 Southwood Drive**.

BRIEFING SCHEDULE:

The Appellant may, but is not required to, submit a one page (double-spaced) supplementary statement with this Preliminary Statement of Appeal. No exhibits or other submissions are allowed at this time.

Appellant's Brief is due on or before: 4:30 p.m. on **October 27, 2022**, **(no later than three Thursdays prior to the hearing date)**. The brief may be up to 12 pages in length with unlimited exhibits. It shall be double-spaced with a minimum 12-point font. An electronic copy shall be emailed to: boardofappeals@sfgov.org, julie.rosenberg@sfgov.org, corey.teague@sfgov.org, tina.tam@sfgov.org and jduke101@yahoo.com.

Respondent's and Other Parties' Briefs are due on or before: 4:30 p.m. on **Wednesday, November 9, 2022**, **(one day earlier than the Board's regular briefing schedule due to the Veterans' Day holiday on 11/11/22)**. The brief may be up to 12 pages in length with unlimited exhibits. It shall be doubled-spaced with a minimum 12-point font. An electronic copy shall be emailed to: boardofappeals@sfgov.org, julie.rosenberg@sfgov.org, corey.teague@sfgov.org, tina.tam@sfgov.org and zhiminli@outlook.com.

Hard copies of the briefs do NOT need to be submitted to the Board Office or to the other parties.

Hearing Date: **Wednesday, November 16, 2022, 5:00 p.m., Room 416 San Francisco City Hall, 1 Dr. Carlton B. Goodlett Place.** The parties may also attend remotely via Zoom. Information for access to the hearing will be provided before the hearing date.

All parties to this appeal must adhere to the briefing schedule above, however if the hearing date is changed, the briefing schedule MAY also be changed. Written notice will be provided of any changes to the briefing schedule.

In order to have their documents sent to the Board members prior to hearing, **members of the public** should email all documents of support/opposition no later than 4:30 p.m. on Wednesday November 16, 2022, to boardofappeals@sfgov.org. Please note that names and contact information included in submittals from members of the public will become part of the public record. Submittals from members of the public may be made anonymously.

Please note that in addition to the parties' briefs, any materials that the Board receives relevant to this appeal, including letters of support/opposition from members of the public, are distributed to Board members prior to hearing. All such materials are available for inspection on the Board's website at www.sfgov.org/boa. You may also request a hard copy of the hearing materials that are provided to Board members at a cost of 10 cents per page, per S.F. Admin. Code Ch. 67.28.

The reasons for this appeal are as follows:

Their deck extended 3 feet on the west which already landed on easement and right next to the fence and the electricity pole. It will create safety issue and people can easily climb over the fence by stepping on the deck.

Appeal filed via email by the appellant.

Permit Details Report

Report Date:	**10/4/2022 9:01:13 AM**
Application Number:	202207229084
Form Number:	8
Address(es):	3196 / 022 / 0 175 SOUTHWOOD DR
Description:	IN RESPONSE TO NOV 202292465. LEGALIZE THE CONSTRUCTION OF STRUCTURE (EXISTING DECK) AT REAR YARD WHICH EXCEEDS 8" IN HEAIGHT AND 100 SF FEET IN AREA; NEW DECK IS APPROX 6'x9'
Cost:	$9,800.00
Occupancy Code:	R-3
Building Use:	27 - 1 FAMILY DWELLING

Disposition / Stage:

Action Date	Stage	Comments
7/22/2022	TRIAGE	
7/22/2022	FILING	
7/22/2022	FILED	
9/23/2022	APPROVED	
9/23/2022	ISSUED	

Contact Details:

Contractor Details:

License Number: OWNER
Name: OWNER
Company Name: OWNER
Address: OWNER * OWNER CA 00000-0000
Phone:

Addenda Details:

Description:

Step	Station	Arrive	Start	In Hold	Out Hold	Finish	Checked By	Hold Description
1	HIS	7/22/22	7/22/22			7/22/22	LUTON MATT	
2	INTAKE	7/22/22	7/22/22			7/22/22	BROWN SHARAE	
3	CP-ZOC	7/29/22	7/29/22			7/29/22	GRETEL GUNTHER	Shed exceeds 100SF and 8' height and is located in required rear yard. Deck with landing and stair on property line will need fire-wall that exceeds 10-feet in height will need public notice. (Corrette 7.22.22) 07/29/22 - Approve 3' of demo of existing deck along western property line. Build new portion of deck (8'-6") and corresponding staircase at rear of building within buildable area and 3' in from west property line. Deck and stair will not need firewall and are not within required 3' side yard setback. -G.G.
4	CP-ZOC	9/23/22	9/23/22			9/23/22	GORDON-JONCKHEER ELIZABETH	restamp for GG
5	BLDG	9/23/22	9/23/22			9/23/22	LIU STEPHEN	Approved otc
6	CPB	9/23/22	9/23/22			9/23/22	SAPHONIA COLLINS	

This permit has been issued. For information pertaining to this permit, please call 628-652-3450.

Appointments:

Appointment Date	Appointment AM/PM	Appointment Code	Appointment Type	Description	Time Slots

Inspections:

Activity Date	Inspector	Inspection Description	Inspection Status

Special Inspections:

Addenda No.	Completed Date	Inspected By	Inspection Code	Description	Remarks

For information, or to schedule an inspection, call 628-652-3400 between 8:30 am and 3:00 pm.

Station Code Descriptions and Phone Numbers

Online Permit and Complaint Tracking home page.

Technical Support for Online Services
If you need help or have a question about this service, please visit our FAQ area.

Contact SFGov Accessibility Policies
City and County of San Francisco © 2022

BRIEF SUBMITTED BY THE APPELLANT(S)

Supplementary Statement of Appeal

The reasons of my appeal are as follows:

1) The height of shed is too high which is over the height of fence. It blocks some of the sunshine into our yard and affecting the air flows. It also changed the scenery of view from our house which makes us very uncomfortable because the space looks very packed.
2) The deck extended to easement and right next to the electricity pole which might create safety hazards in the future.
3) The deck built too close to our fence and people can climb easily into our yard just by jumping over by the deck which create some security concerns to us.

COMPOSTABLES
RECYCLABLES

BRIEF SUBMITTED BY THE PERMIT HOLDER(S)

Respondent Brief for Appeal No. 22-070

(Juan Duque-Architect on behalf of Mary-Beth Allison and Gerardo Corpuz)

Introduction: Mary-Beth Allison and Gerardo Corpuz live at 175 Southwood Drive as their primary residence. I was approached by them requesting Architectural services to help them respond to a notice of violation (202292465 / July 12, 2022). This permit is in direct response to the violation. We obtained a permit (2022-0722-9084) on September 23, 2022, having an appeal window expiring October 07, 2022. Mr. Li's Protest Appeal was issued on October 11, 2022 which is after the appeal's period. Regardless, we are confident that the scope which is represented in permit 2022-0722-9084, does provide appropriate solutions to Mr. Li's concerns and we are hopeful that the Board of Appeals will agree and uphold the entitlement as is with no new conditions. The following are direct responses to Mr. Li's Brief, received 10/27/2022.

A) This is Mr. Li's statement: *The height of shed is too high which is over the height of fence. It blocks some of the sunshine into our yard and affecting the air flows. It also changed the scenery of view from our house which makes us very uncomfortable because the space looks very packed*

1) **Response**: I cannot comment about Mr Li's statement about an existing pre-engineered shed that is taller than a 5'-0" tall rear yard fence and how the view into his neighbor's yards has been impeded because permit 2022-0722-9084 is specific to an existing deck which this permit purposes to dismantle and rebuild to be code compliant. Attributes that this permit will provide is that the existing easement will be respected, and the new deck area will be reduced to being 9'x6' with a top landing and stairs.

B) This is Mr. Li's second statement: *The deck extended to easement and right next to the electricity pole which might create safety hazards in the future.*

1) **Response**: Mr. Li's statement about the existing deck extending into the existing 3' easement and an existing wood post; which supports the local electrical grid, is true. This permit purposes to dismantle and rebuild the existing deck to be outside of the existing easement by reducing the deck area to being a 9'x6' deck with landing and new stairs.

C) Mr. Li's last statement: *The deck built too close to our fence and people can climb easily into our yard just by jumping over by the deck which create some security concerns to us.*

1) **Response**: Mr. Li's statement about the existing deck is built too close to their rear yard fence is being addressed by Permit 2022-0722-9084. The existing deck is approximately 1' from the property line which is shared with Mary-Beth/Gerardo's property and Mr. Li's rear yard. Attributes that this permit will provide is that the deck area will be reduced from being over 100 sq. ft, to being a 9'x6' (54 sq. ft.) deck with landing and stairs. This is accomplished by pulling the edge away from Mr. Li's rear property line; providing approximately 4' in distance.

Summary: The written body above is our attempt to respond to each of Mr. Li's points per his brief and we hope to have alleviated his concerns. As you can see; the scope represented by this permit corrects and addresses all of Mr. Li's relevant issues. Considering this, we respectfully request that the suspension of permit 2022-0722-9084; be removed, therefore upholding our entitlement, allowing for Mary Beth and Gerardo to begin making corrections to their deck.

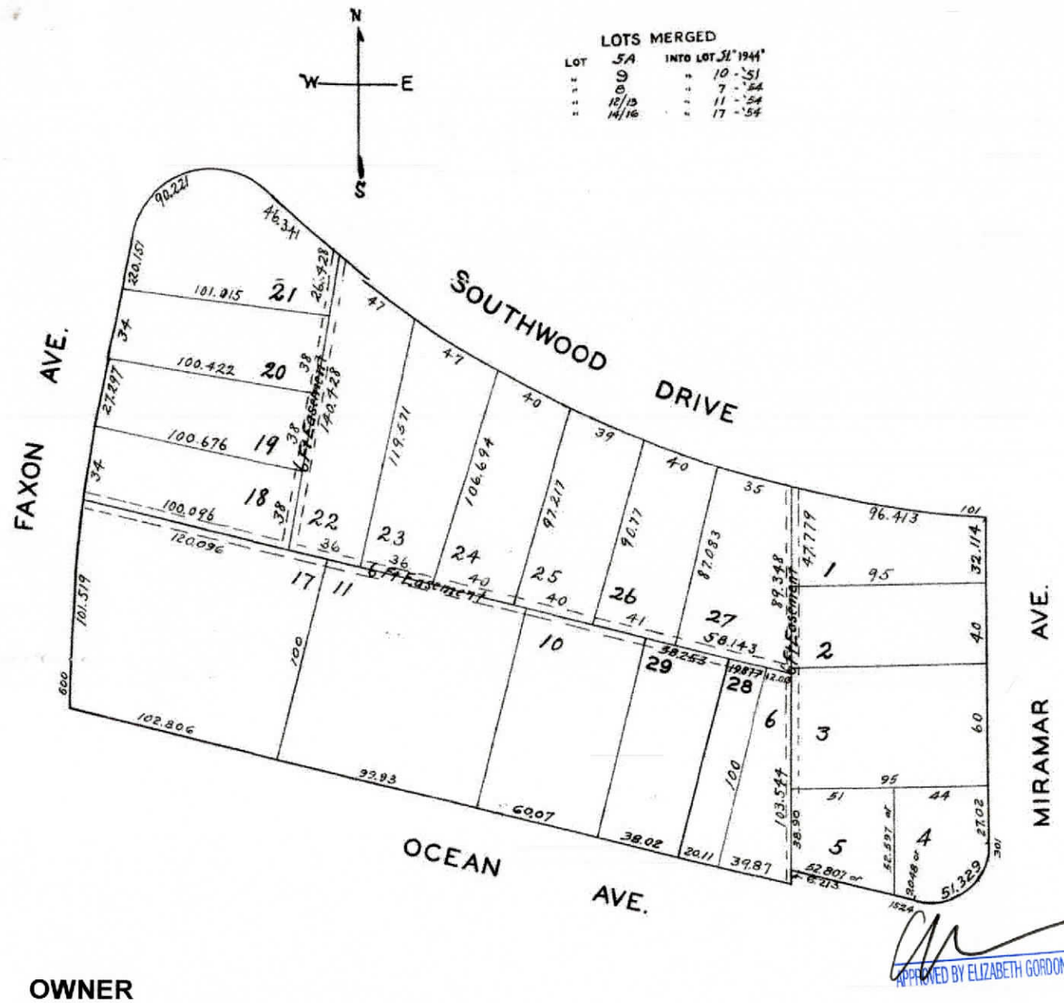

Stephen Liu, DBI

SEP 23 2022

175 SOUTHWOOD DRIVE

FOR PERMIT

RECEIVED

SEP 23 2022

PROJECT DESCRIPTION

IN RESPONSE TO NOTICE OF VIOLATION 202292465; LEGALIZE THE CONSTRUCTION OF STRUCTURE (EXISTING DECK) AT REAR YARD, WHICH EXCEEDS 8'-0" IN HEIGHT AND 100 SF IN AREA.

THIS PLAN MEETS THE QUALITY STANDARD FOR DIGITIZING ACCEPTED

PROJECT INFORMATION

PROJECT ADDRESS:	175 SOUTHWOOD DR, SAN FRANCISCO, CA 94112
BLOCK/LOT:	3196/022
PLANING DISTRICT:	DISTRICT 1 RICHMOND
ZONING DISTRICT:	RH-1(D)
HEIGHT & BULK DISTRICTS:	28-X
USE TYPE:	DWELLING
TYPE OF CONSTRUCTION:	V-B
PARCEL AREA:	5,436 SQ FT
BUILDING AREA(GROSS):	EXISTING - 1,125 SQ FT (NO CHANGE)

SHEET INDEX

ARCHITECTURE

A000	COVER SHEET
A001	EXISTING SITE PLAN
A002	PROPOSED SITE PLAN
A101	EXISTING PLANS
A102	DEMOLISION PLANS
A103	PROPOSED PLANS
A104	EXISTING AND PROPOSED DECK ISO IMAGES

STRUCTURAL DRAWINGS

S1.0	GENERAL STRUCTRUAL NOTES
S1.1	GENERAL STRUCTURAL NOTES
S2.1	DECK FRAMING & FOUNDATIONS PLANS
S4.1	CONCRETE & WOOD DETAILS
S4.2	WOOD DETAILS
S4.3	WOOD DETAILS

APPLICABLE CODES AND STANDARDS

2019 CALIFORNIA BUILDING CODE
2019 CALIFORNIA FIRE CODE
ALL CITY AND COUNTY OF SAN FRANCISCO AMENDMENTS

APPROVED
Dept. of Building Insp.
- San Francisco -
SEP 23 2022

PATRICK O'RIORDAN
DIRECTOR
OF BUILDING INSPECTION

OWNER
Gerardo Corpuz & MaryBeth Allison
175 Southwood Drive
SAN FRANCISCO, CA 94112
CONTACT NAME: MaryBeth Allison
PHONE: 415-528-0410
EMAIL: gerardocorpuz@gmail.com

ARCHITECT:
Juan M. Duque, Jr.
1315 Laguna Street, No. 01
San Francisco, CA 94115
p 415 341 3739

Project:
175 SOUTHWOOD DRIVE
PERMIT SET

Project Number:
2022_0701

Clients:
GERARDO CURPUZ & MARY BETH ALLISON

Rev.	Issue	Date
1	FOR PERMIT	07-22-22
3	FOR PERMIT R2	09-23-22

Seal:

Scale:

Drawing Description:
COVER SHEET

Drawn by: MKT Checked by: JMD

Sheet Number:
A000

2022-0701

All drawings and written material contained herein constitute original and unpublished work of the arhictect and may not be duplicated, used or disclosed without written consent of the architect. Accuracy of drawings is for design purposes only. Do not scale off drawings.

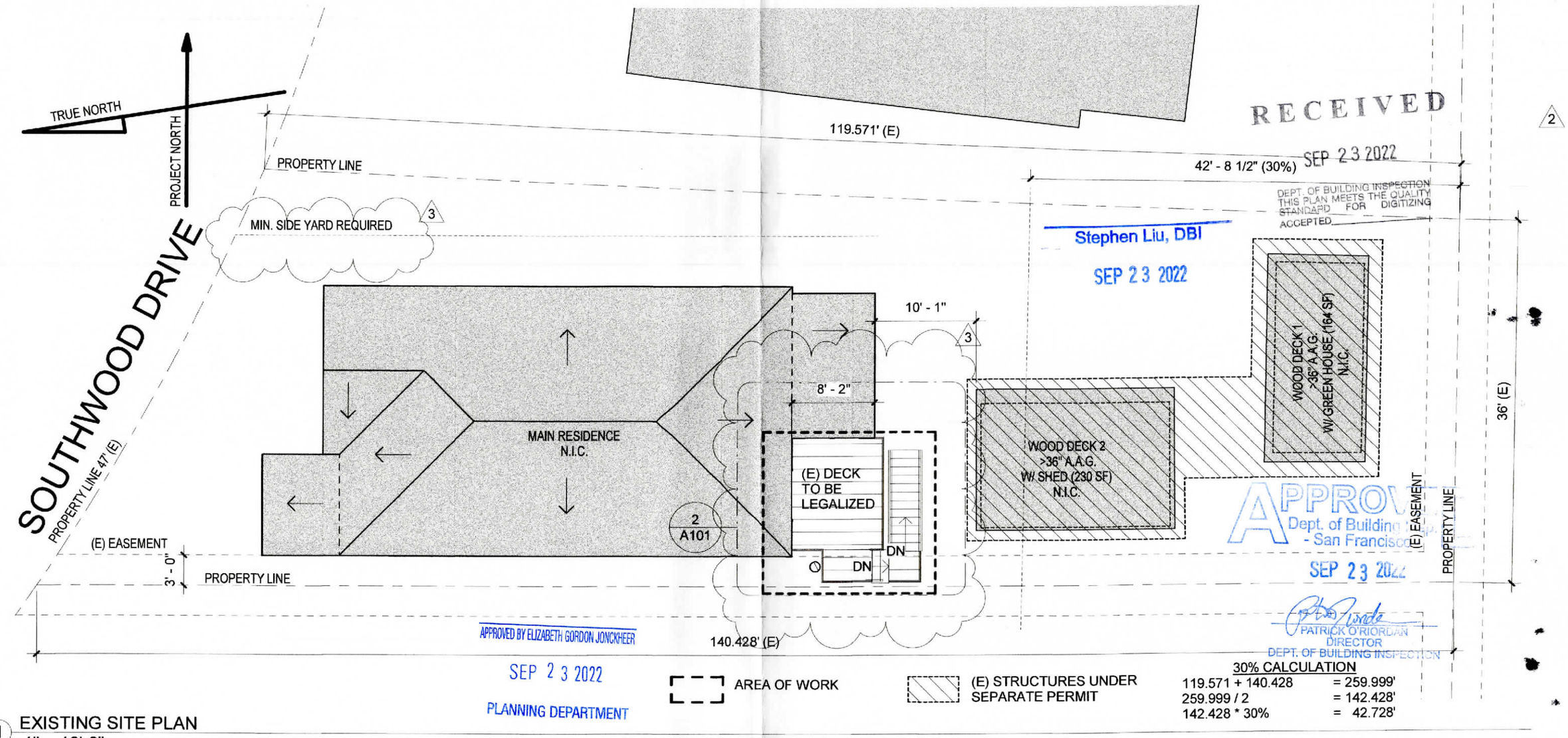

1 EXISTING SITE PLAN
1" = 10'-0"

ARCHITECT:
Juan M. Duque, Jr.
1315 Laguna Street, No. 01
San Francisco, CA 94115
p 415 341 3739

Project:
175 SOUTHWOOD DRIVE
PERMIT SET

Project Number:
2022_0701

Clients:
GERARDO CURPUZ & MARY BETH ALLISON

Rev.	Issue	Date
1	FOR PERMIT	07-22-22
2	FOR PERMIT R1	07-29-22
3	FOR PERMIT R2	09-23-22

Seal:
LICENSED ARCHITECT
JUAN MANUEL DUQUE JR.
No. C34336
Ren. 7/9/2023
STATE OF CALIFORNIA

Scale: 1" = 10'-0"

N

3 Drawing Description:
EXISTING SITE PLAN

Drawn by: JMD Checked by: -

Sheet Number:
A001

All drawings and written material contained herein constitute original and unpublished work of the arhictect and may not be duplicated, used or disclosed without written consent of the architect. Accuracy of drawings is for design purposes only. Do not scale off drawings.

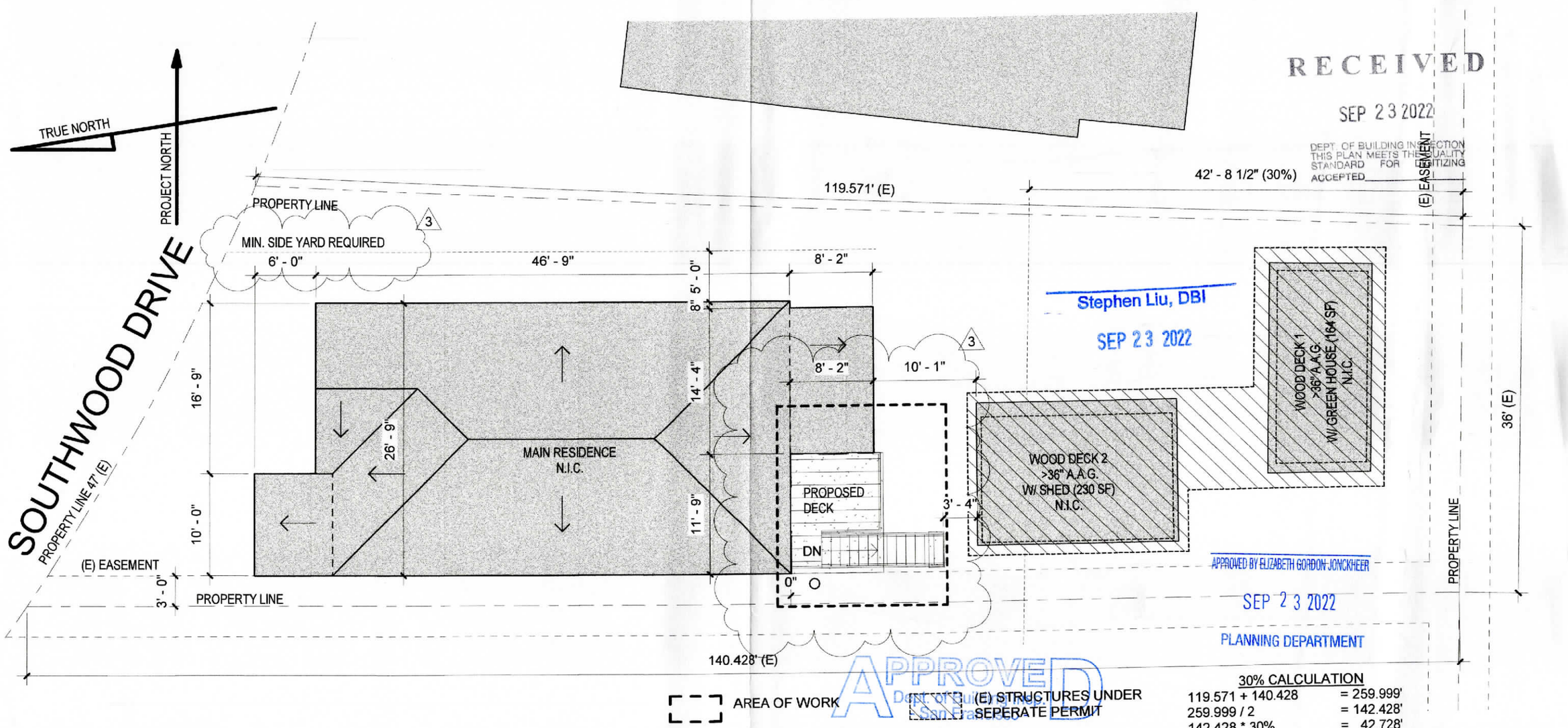

RECEIVED
SEP 23 2022
DEPT. OF BUILDING INSPECTION
THIS PLAN MEETS THE QUALITY STANDARD FOR ENTITLEMENT
ACCEPTED

Stephen Liu, DBI
SEP 23 2022

APPROVED BY ELIZABETH GORDON JONCKHEER
SEP 23 2022
PLANNING DEPARTMENT

APPROVED
Dept. of Building Insp.
San Francisco
SEP 23 2022
PATRICK O'RIORDAN
DIRECTOR
DEPT. OF BUILDING INSPECTION

30% CALCULATION	
119.571 + 140.428	= 259.999'
259.999 / 2	= 142.428'
142.428 * 30%	= 42.728'

1 PROPOSED SITE PLAN
1" = 10'-0"

ARCHITECT:
Juan M. Duque, Jr.
1315 Laguna Street, No. 01
San Francisco, CA 94115
p 415 341 3739

Project:
175 SOUTHWOOD DRIVE
PERMIT SET

Project Number:
2022_0701

Clients:
GERARDO CURPUZ & MARY BETH ALLISON

Rev.	Issue	Date
3	FOR PERMIT R2	09-23-22

Seal:
LICENSED ARCHITECT
JUAN MANUEL DUQUE JR.
No. C34336
Ren. 7/9/2023
STATE OF CALIFORNIA

Scale: 1" = 10'-0"

3 Drawing Description:
PROPOSED SITE PLAN

Drawn by: Author Checked by: Checker

Sheet Number:
A002

All drawings and written material contained herein constitute original and unpublished work of the arhictect and may not be duplicated, used or disclosed without written consent of the architect. Accuracy of drawings is for design purposes only. Do not scale off drawings.

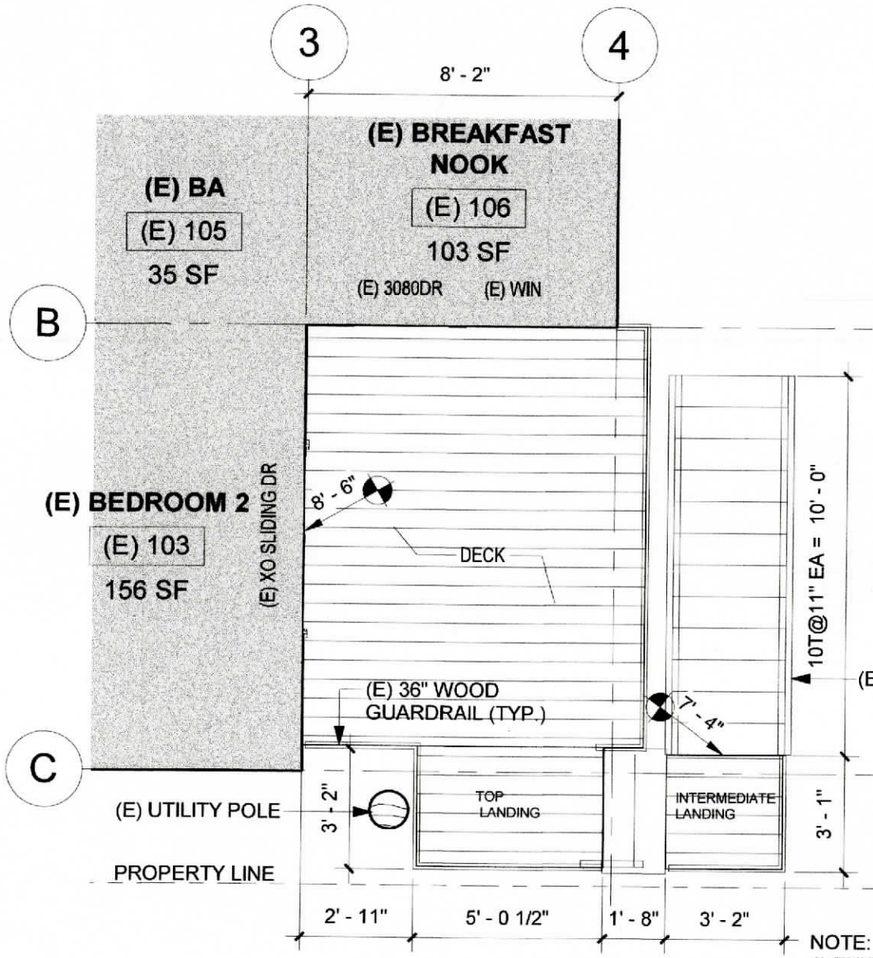

NOTE:
1) EXISTING LANDING WITHIN 36" FROM PROPERTY LINE TO BE DEMO'D

2) 3' OF A 6' WIDE EASEMENT IS LOCATED ALONG PROPERTY LINE

2 EXISTING PLAN @ FIRST FLOOR
1/4" = 1'-0"

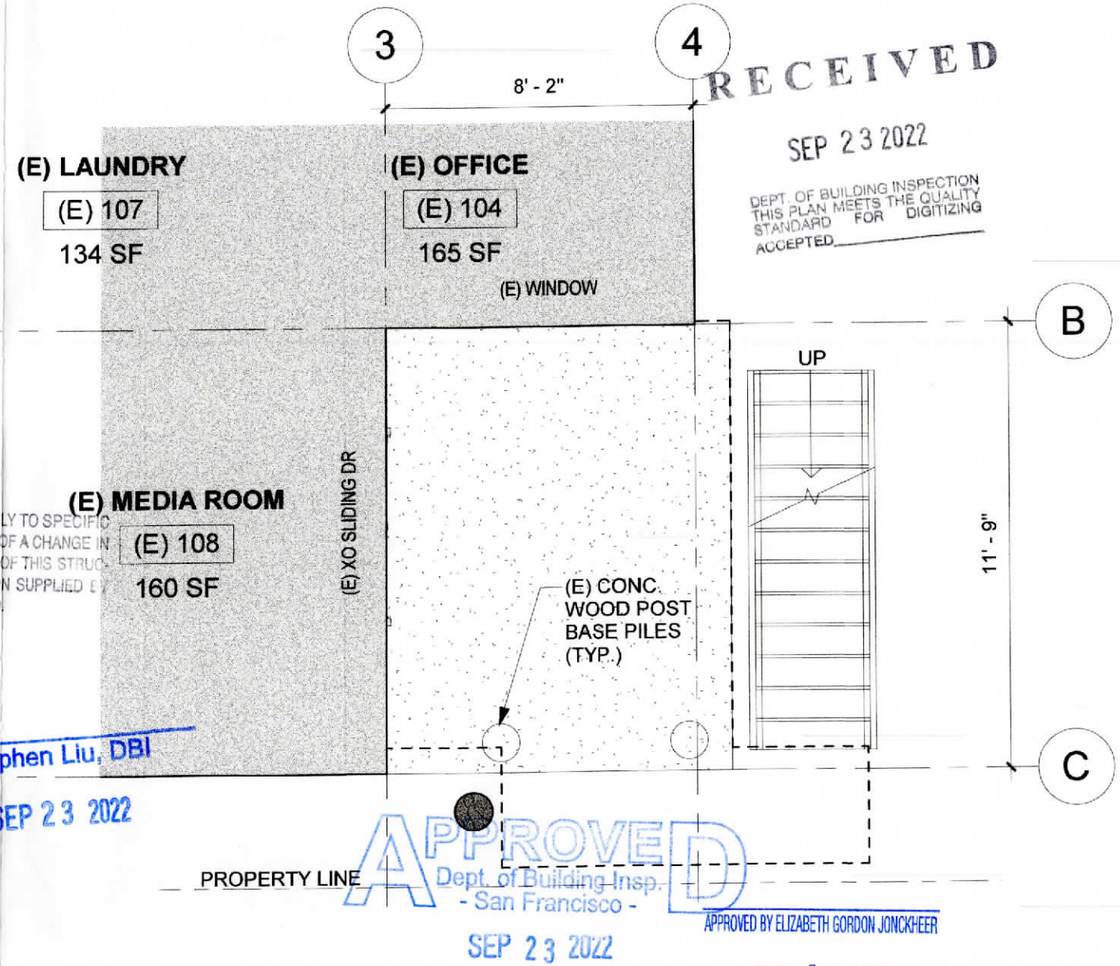

1 EXISTING PLAN @ BASEMENT
1/4" = 1'-0"

0 1 2 4 8

APPROVAL OF THIS APPLICATION APPLIES ONLY TO SPECIFIC WORK AND DOES NOT CONSTITUTE APPROVAL OF A CHANGE IN THE LEGALLY PERMITTED USE OR CHARACTER OF THIS STRUCTURE. APPROVAL IS BASED UPON INFORMATION SUPPLIED BY THE APPLICANT WHICH HAS NOT BEEN VERIFIED.

Stephen Liu, DBI
SEP 23 2022

RECEIVED
SEP 23 2022
DEPT. OF BUILDING INSPECTION
THIS PLAN MEETS THE QUALITY STANDARD FOR DIGITIZING
ACCEPTED

APPROVED
Dept. of Building Insp.
- San Francisco -
SEP 23 2022
PATRICK O'RIORDAN
DIRECTOR
DEPARTMENT OF BUILDING INSPECTION

APPROVED BY ELIZABETH GORDON JONCKHEER
SEP 23 2022
PLANNING DEPARTMENT

ARCHITECT:
Juan M. Duque, Jr.
1315 Laguna Street, No. 01
San Francisco, CA 94115
p 415 341 3739

Project:
175 SOUTHWOOD DRIVE
PERMIT SET

Project Number:
2022_0701

Clients:
GERARDO CURPUZ & MARY BETH ALLISON

Rev.	Issue	Date
1	FOR PERMIT	07-22-22

Seal:

LICENSED ARCHITECT
JUAN MANUEL DUQUE JR.
No. C34336
Ren. 7/9/2023
STATE OF CALIFORNIA

Scale: 1/4" = 1'-0"

N

Drawing Description:
EXISTING PLANS

Drawn by: MKT Checked by: JMD

Sheet Number:
A101

All drawings and written material contained herein constitute original and unpublished work of the arhictect and may not be duplicated, used or disclosed without written consent of the architect. Accuracy of drawings is for design purposes only. Do not scale off drawings.

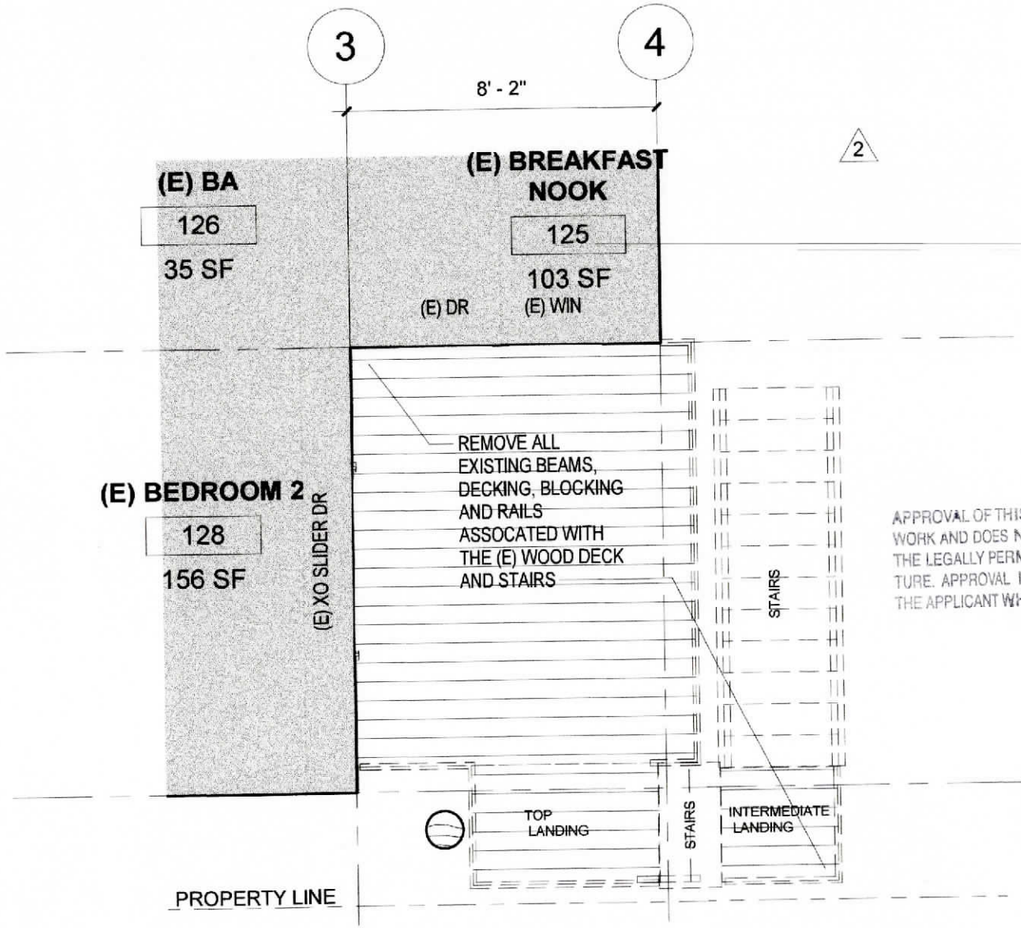

1 DEMO PLAN @ FIRST FLOOR
1/4" = 1'-0"

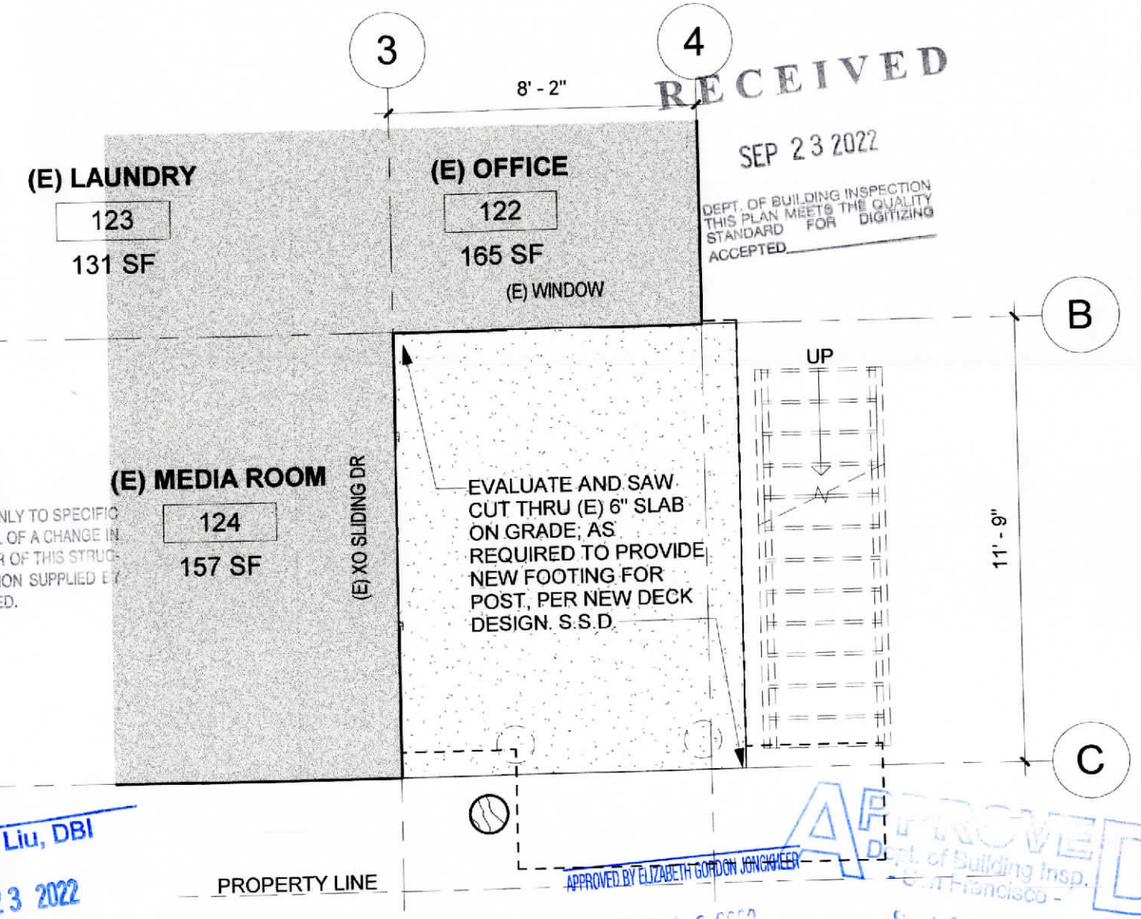

2 DEMO PLAN @ BASEMENT
1/4" = 1'-0"

0 4 8 16 32

N

RECEIVED
SEP 23 2022
DEPT. OF BUILDING INSPECTION
THIS PLAN MEETS THE QUALITY STANDARD FOR DIGITIZING
ACCEPTED

APPROVAL OF THIS APPLICATION APPLIES ONLY TO SPECIFIC WORK AND DOES NOT CONSTITUTE APPROVAL OF A CHANGE IN THE LEGALLY PERMITTED USE OR CHARACTER OF THIS STRUCTURE. APPROVAL IS BASED UPON INFORMATION SUPPLIED BY THE APPLICANT WHICH HAS NOT BEEN VERIFIED.

Stephen Liu, DBI
SEP 23 2022

APPROVED BY ELIZABETH GORDON JONCKHEER
PLANNING DEPARTMENT

APPROVED
Dept. of Building Insp.
San Francisco
SEP 23 2022
PATRICK O'RIORDAN
DIRECTOR
DEPT. OF BUILDING INSPECTION

ARCHITECT:
Juan M. Duque, Jr.
1315 Laguna Street, No. 01
San Francisco, CA 94115
p 415 341 3739

Project:
175 SOUTHWOOD DRIVE
PERMIT SET

Project Number:
2022_0701

Clients:
GERARDO CURPUZ & MARY BETH ALLISON

Rev.	Issue	Date
2	FOR PERMIT R1	07-29-22

Seal:
LICENSED ARCHITECT
JUAN MANUEL DUQUE JR.
No. C34336
Ren. 7/9/2023
STATE OF CALIFORNIA

Scale: **1/4" = 1'-0"**

Drawing Description:
DEMOLISION PLANS

Drawn by: Author Checked by: Checker

Sheet Number: **A102**

... used or disclosed without written consent of the architect. Accuracy of drawings is for design purposes only. Do not scale off drawings.

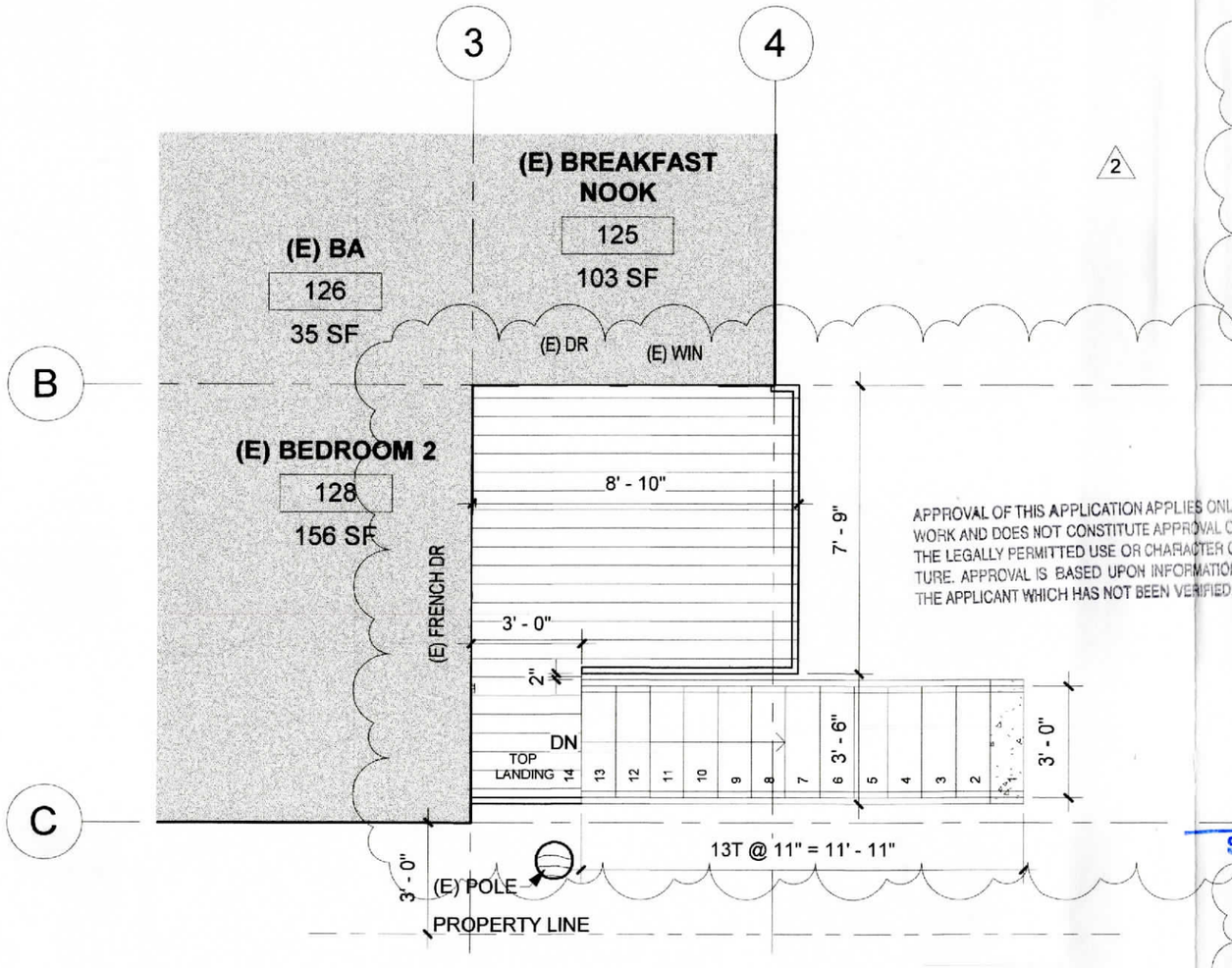

1 PROPOSED PLAN @ FIRST FLOOR
1/4" = 1'-0"

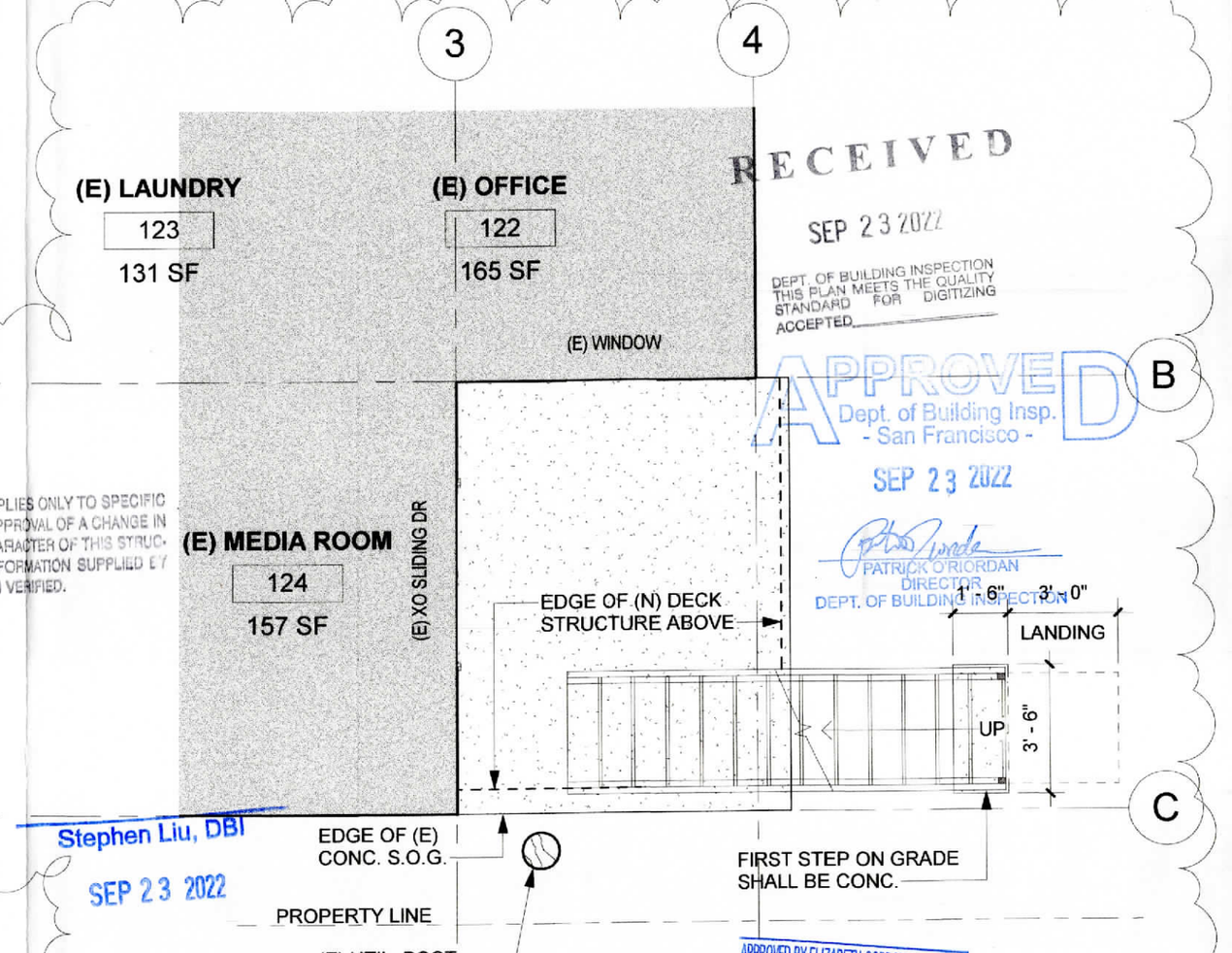

2 PROPOSED PLAN @ BASEMENT
1/4" = 1'-0"

0 1 2 4 8

RECEIVED
SEP 23 2022
DEPT. OF BUILDING INSPECTION
THIS PLAN MEETS THE QUALITY STANDARD FOR DIGITIZING
ACCEPTED

APPROVED
Dept. of Building Insp.
- San Francisco -
SEP 23 2022
PATRICK O'RIORDAN
DIRECTOR
DEPT. OF BUILDING INSPECTION

APPROVAL OF THIS APPLICATION APPLIES ONLY TO SPECIFIC WORK AND DOES NOT CONSTITUTE APPROVAL OF A CHANGE IN THE LEGALLY PERMITTED USE OR CHARACTER OF THIS STRUCTURE. APPROVAL IS BASED UPON INFORMATION SUPPLIED BY THE APPLICANT WHICH HAS NOT BEEN VERIFIED.

Stephen Liu, DBI
SEP 23 2022

APPROVED BY ELIZABETH GORDON JONCKHEER
SEP 23 2022
PLANNING DEPARTMENT

ARCHITECT:
Juan M. Duque, Jr.
1315 Laguna Street, No. 01
San Francisco, CA 94115
p 415 341 3739

Project:
175 SOUTHWOOD DRIVE
PERMIT SET

Project Number:
2022_0701

Clients:
GERARDO CURPUZ & MARY BETH ALLISON

Rev.	Issue	Date
1	FOR PERMIT	07-22-22
2	FOR PERMIT R1	07-29-22
3	FOR PERMIT R2	09-23-22

Seal:
LICENSED ARCHITECT
JUAN MANUEL DUQUE JR.
No. C34336
Ren. 7/9/2023
STATE OF CALIFORNIA

Scale: 1/4" = 1'-0"

Drawing Description:
PROPOSED PLANS

Drawn by: MKT Checked by: JMD

Sheet Number:
A103

All drawings and written material contained herein constitute original and unpublished work of the arhictect and may not be duplicated, used or disclosed without written consent of the architect. Accuracy of drawings is for design purposes only. Do not scale off drawings.

RECEIVED
SEP 23 2022
DEPT. OF BUILDING INSPECTION
THIS PLAN MEETS THE QUALITY
STANDARD FOR DIGITIZING
ACCEPTED

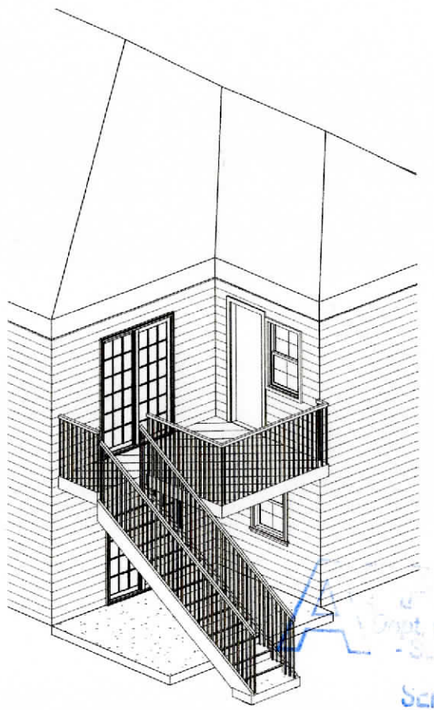

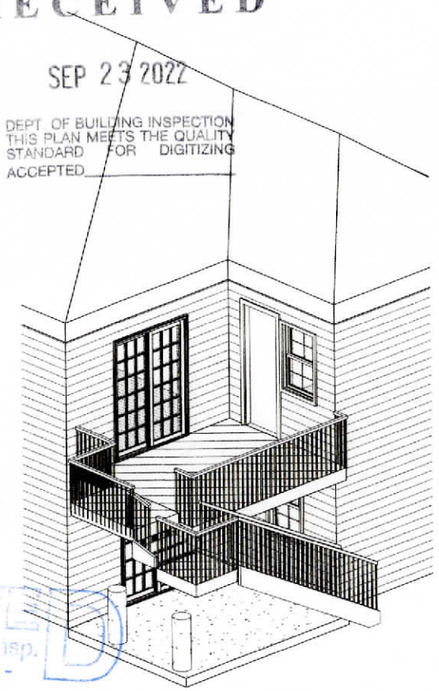

APPROVED
Dept. of Building Insp.
San Francisco
SEP 23 2022

2 PROPOSED ISO

1 EXISTING ISO

PATRICK O'RIORDAN
DIRECTOR
DEPT. OF BUILDING INSPECTION

Stephen Liu, DBI
SEP 23 2022

APPROVED BY ELIZABETH GORDON JONCKHEER
SEP 23 2022
PLANNING DEPARTMENT

ARCHITECT:
Juan M. Duque, Jr.
1315 Laguna Street, No. 01
San Francisco, CA 94115
p 415 341 3739

Project:
175 SOUTHWOOD DRIVE
PERMIT SET

Project Number:
2022_0701

Clients:
GERARDO CURPUZ & MARY BETH ALLISON

Rev.	Issue	Date
3	FOR PERMIT R2	09-23-22

Seal:

Scale:

Drawing Description:
EXISTING AND PROPOSED DECK ISO IMAGES

Drawn by: Author Checked by: Checker

Sheet Number:
A104

3

All drawings and written material contained herein constitute original and unpublished work of the arhictect and may not be duplicated, used or disclosed without written consent of the architect. Accuracy of drawings is for design purposes only. Do not scale off drawings.

I. GENERAL

A. ALL CONSTRUCTION AND INSPECTION SHALL CONFORM TO THE 2019 CALIFORNIA BUILDING CODE W/AMENDMENTS BY LOCAL JURISDICTIONS.

B. CONTRACTOR SHALL VERIFY ALL DIMENSIONS AT THE JOB SITE BEFORE COMMENCING WORK AND SHALL REPORT ANY DISCREPANCIES TO THE ARCHITECT OR ENGINEER.

C. OMISSIONS OR CONFLICTS BETWEEN VARIOUS ELEMENTS OF THE DRAWINGS, NOTES AND DETAILS SHALL BE BROUGHT TO THE ATTENTION OF THE ARCHITECT AND RESOLVED BEFORE PROCEEDING WITH THE WORK.

D. DO NOT USE SCALED DIMENSIONS; USE WRITTEN DIMENSIONS OR WHERE NO DIMENSION IS PROVIDED, CONSULT THE ARCHITECT FOR CLARIFICATION BEFORE PROCEEDING WITH THE WORK.

E. DETAILS SHOWN SHALL BE INCORPORATED INTO THE PROJECT AT ALL APPROPRIATE LOCATIONS WHETHER SPECIFICALLY CALLED OUT OR NOT. TYPICAL DETAILS ARE INTENDED TO APPLY TO APPLICABLE SITUATIONS UON. IN GENERAL, TYPICAL DETAILS ARE NOT SPECIFICALLY REFERENCED.

F. FOR WATERPROOFING, FIREPROOFING, ETC. REFER TO DRAWINGS OTHER THAN STRUCTURAL.

G. SEE DRAWINGS OTHER THAN STRUCTURAL FOR: KINDS OF FLOOR FINISH AND THEIR LOCATION, FOR DEPRESSIONS IN FLOOR SLABS, FOR OPENINGS IN WALLS AND FLOORS REQUIRED BY ARCHITECTURAL AND MECHANICAL FEATURES, FOR ROADWAY PAVING, WALKS, RAMPS, STAIRS, CURBS, ETC.

H. HOLES AND OPENINGS THROUGH WALLS AND FLOORS FOR DUCTS, PIPING AND VENTILATION SHALL BE CHECKED BY THE CONTRACTOR, WHO SHALL VERIFY SIZES AND LOCATIONS OF SUCH HOLES OR OPENINGS WITH THE PLUMBING, HEATING, VENTILATION AND ELECTRICAL DRAWINGS AND THESE SUBCONTRACTORS.

I. NO PIPES NOR DUCTS SHALL BE PLACED IN SLABS OR WALLS UNLESS SPECIFICALLY DETAILED OR APPROVED BY THE ARCHITECT.

J. DRAWINGS AND SPECIFICATIONS REPRESENT FINISHED STRUCTURE. CONTRACTOR SHALL BE RESPONSIBLE FOR MEANS AND METHODS OF CONSTRUCTION INCLUDING BUT NOT LIMITED TO SHORING AND TEMPORARY BRACING. THE CONTRACTOR SHALL UNDERTAKE ALL NECESSARY MEASURES TO ENSURE SAFETY OF ALL PERSONS AND STRUCTURES AT THE SITE AND ADJACENT TO THE SITE. OBSERVATION VISITS TO THE SITE BY THE ARCHITECT, ENGINEER OR CONSTRUCTION MANAGER SHALL NOT RELIEVE THE CONTRACTOR OF SUCH RESPONSIBILITY.

II. DESIGN CRITERIA

A. APPLICABLE BUILDING CODE(S):
CALIFORNIA BUILDING CODE (CBC), 2019 EDITION, INCLUDING AMENDMENTS BY LOCAL JURISDICTIONS

B. VERTICAL LIVE LOADS:
1. BALCONIES & DECKS: 60 PSF

C. WIND LOADS:
BASIC WIND SPEED = 92 MPH
EXPOSURE: B
Iw = 1.0

D. SEISMIC LOADS:
1. SEISMIC COMPONENT ANCHORAGE:
Ss = 1.81; S1 = 0.74; SDS = 1.448
Ap, Rp = VARIES (SEE ASCE 7-16 TABLES 13.5-1 & 13.6-1)
Ip = 1.0; FP SUBJECT TO COMPONENT ATTACHMENT ELEVATIONS
Fp MAX = 2.317 WP; Fp MIN = 0.434 WP
12 PSF HORIZONTAL SEISMIC LOAD USED

E. FOUNDATION DESIGN CRITERIA
1. ALL FOOTINGS SHALL BEAR ON FIRM, UNDISTURBED SOIL. BOTTOM OF FOOTINGS SHOWN ON THE DRAWINGS ARE MINIMUM AND SHALL BE LOWERED AS REQUIRED TO REMOVE SOFT AND LOOSE MATERIAL.
2. SPREAD FOOTINGS, PRESUMPTIVE SOIL BEARING PRESSURES (CBC TABLE 1806.2):

DEAD LOADS:	1500 PSF
DEAD + LIVE LOADS:	1500 PSF
DEAD + LIVE + SEISMIC LOADS:	1500 PSF

III. MATERIALS

A. CONCRETE
1. ALL CONCRETE SHALL BE REINFORCED UON.
2. ALL CONCRETE SHALL BE THOROUGHLY CONSOLIDATED.
3. ALL CONCRETE SHALL BE MIXED AND PLACED IN ACCORDANCE WITH ACI 318. USE MIXES WITH MAXIMUM AGGREGATE SIZE APPROPRIATE FOR FORM AND REBAR CLEARANCES TO BE ENCOUNTERED (SEE ACI).
4. CONCRETE STRENGTH AND WEIGHT:

LOCATION	MIN 28-DAY STRENGTH (PSI)	MAX WEIGHT (PSF)	AGGREGATE SIZE	SLUMP +/-1"	WATER/ CEMENT RATIO	MIN % FLY ASH
SLAB-ON-GRADE	2500	145	3/4"		0.45	15-25%
FOOTINGS	2500	145	3/4"	4"	0.55	0-30%

5. PORTLAND CEMENT SHALL CONFORM TO ASTM C150, TYPE I OR II, LOW ALKALI
6. FLY ASH SHALL CONFORM TO ASTM C618, TYPE F
7. MIN-MAX % FLYASH REFERS TO PERCENTAGE REPLACEMENT OF CEMENT BY WEIGHT.
8. AGGREGATE FOR HARDROCK CONCRETE SHALL CONFORM TO ALL REQUIREMENTS AND TESTS OF ASTM C33. EXCEPTIONS MAY BE USED ONLY WITH THE PERMISSION OF THE STRUCTURAL ENGINEER.
9. PROJECTING CORNERS OF BEAMS, WALLS, COLUMNS, ETC. SHALL BE FORMED WITH A 3/4" CHAMFER, UON ON ARCHITECTURAL DRAWINGS.
10. PRIOR TO PLACING CONCRETE, THE CONTRACTOR SHALL ENSURE THAT ALL EMBEDMENTS, INCLUDING COLUMN ANCHOR BOLTS, SILL BOLTS, HOLDOWN ANCHOR BOLTS, ETC. ARE PROPERLY LOCATED AND SECURELY TIED IN PLACE.
11. NON-SHRINK GROUT: PREMIXED HIGH-STRENGTH GROUT REQUIRING ONLY

REGISTERED PROFESSIONAL ENGINEER
JASON A. PISANO
NO. C 69708
Exp. 6/30/24
CIVIL
STATE OF CALIFORNIA

RECEIVED
SEP 23 2022
DEPT. OF BUILDING INSPECTION
THIS PLAN MEETS THE QUALITY STANDARD FOR DIGITIZING
ACCEPTED

Stephen Liu, DBI
SEP 23 2022
APPROVED
Dept. of Building Insp.
- San Francisco -
SEP 23 2022
PATRICK O'RIORDAN
DIRECTOR
DEPT. OF BUILDING INSPECTION

HOM·PISANO ENGINEERING, INC.
1406 32nd Ave
San Francisco, CA 94122
415.682.4798
hompisano.com

PROJECT
DECK REPLACEMENT
175 SOUTHWOOD DRIVE
SAN FRANCISCO, CA
94112

PROJECT No.
22-099

SHEET TITLE
GENERAL STRUCTURAL NOTES

MILESTONES
PROGRESS PLANS 08/25/22
FINAL REVIEW 09/07/22
BLDG. PERMIT SUBM. 09/22/22

SHEET
S1.0

ADDITION OF WATER AT THE SITE. SAME AS MASTER BUILDER'S "MASTERFLOW 928 GROUT", BURKE'S "NON-FERROUS, NON-SHRINK GROUT" OR EQUAL PRODUCT.

B. REINFORCING STEEL
   1. BARS: ASTM A615, GRADE 60; #4 AND SMALLER, GRADE 40; WELDED REINFORCING SHALL BE A706
   2. MINIMUM CONCRETE COVER FOR REINFORCING STEEL:
      a. SURFACES POURED AGAINST GROUND: 3"
      b. FORMED SURFACES BELOW GRADE: 2"
      c. SURFACES EXPOSED TO WEATHER: 2"
   3. TERMINATION OF REINFORCEMENT:
      a. TERMINATE ALL BARS IN LAPS, 90 DEGREE BENDS, OR WITH DOWELS INTO EXISTING CONCRETE.
      b. BEND TOP MAT OR FOOTING BARS DOWN TO BOTTOM BARS AT ENDS.
      c. BEND BOTTOM MAT OR FOOTING BARS UP WITH STANDARD 90 DEGREE BENDS.
      d. PROVIDE DOWELS INTO FOOTINGS AND SLABS ABOVE AT WALLS AND COLUMNS OF SAME SIZE AND SPACING AS VERTICAL REINFORCEMENT.
   4. ALL REINFORCING STEEL AND EMBEDMENTS TO BE HELD SECURELY IN PLACE PRIOR TO PLACING CONCRETE. PROVIDE SUFFICIENT SUPPORTS TO ALLOW WALKING ON REINFORCEMENT.
   5. PROVIDE DOWELS AT ALL CONSTRUCTION JOINTS (I.E. WALL TO FOOTING) OF SAME SIZE AND SPACING MINIMUM UON.
   6. PROVIDE CONTINUOUS REINFORCEMENT WHERE POSSIBLE. PLACE ONLY AS SHOWN OR APPROVED. STAGGER SPLICES WHERE POSSIBLE.
   7. DETAIL ACCORDING TO ACI-315, MANUAL OF STANDARD PRACTICE FOR DETAILING REINFORCED CONCRETE STRUCTURES.

C. WOOD
   1. FRAMING LUMBER - DOUGLAS FIR-LARCH, TYP UON:
      a. HEADERS, POSTS, BEAMS & JOISTS: No. 1
      b. PLATES, STUDS & BLOCKING: No. 2
      c. ALL LUMBER IN CONTACT WITH CONCRETE 6'-0" OR LESS ABOVE GROUND: PRESSURE-PRESERVATIVE TREATED DOUGLAS FIR. TREAT IN ACCORDANCE WITH AWPA STANDARD U1 FOR ABOVE-GROUND USE. PRESERVATIVE TREATMENT SHALL USE WATER-BORNE PRESERVATIVES.
      d. ALL FRAMING LUMBER SHALL HAVE 19% MAXIMUM MOISTURE CONTENT AT TIME OF INSTALLATION.
   2. PLYWOOD SHEATHING:
      a. ROOF SHEATHING: 5/8" CD EXTERIOR APA RATED 32/16, PS1
      b. FLOOR SHEATHING: 3/4" CD EXTERIOR APA RATED 48/24, PS1
      c. WALL SHEATHING: 15/32" STRUCT I APA RATED, EXPOSURE 1, PS1, 5-PLY
   3. FRAMING HARDWARE AND JOIST HANGERS: AS MANUFACTURED BY SIMPSON STRONGTIE CO. OR APPROVED EQUAL. SIMPSON DESIGNATIONS USED. USE NAILS PER ICC APPROVAL FOR EACH DEVICE. ALL FRAMING HARDWARE AND JOIST HANGERS SHALL BE HOT-DIP GALVANIZED.
   4. NAILS: COMMON WIRE GAGE, UON. SHORT NAILS MAY BE USED PROVIDED THEY HAVE COMMON CODE SPECIFIED MINIMUM EMBEDMENT. ALL NAILING TO CONFORM TO CBC TABLE 2304.9.1, UON. ALL NAILS FOR PLYWOOD SHALL BE GALVANIZED PLYWOOD NAILS.
   5. BOLTS: ASTM A307. ANCHOR RODS: ASTM F1554, FY = 36 KSI UON
      BOLTS FASTENING WOOD MEMBERS SHALL BE FITTED WITH MALLEABLE IRON WASHERS AGAINST WOOD AND STANDARD CUT WASHER AGAINST NUT. HOLES FOR BOLTS SHALL BE BORED 1/32" MAXIMUM OVERSIZE. RETIGHTEN ALL BOLTS BEFORE CLOSING IN. ALL BOLTS SHALL BE GALVANIZED.
   6. FASTENERS IN PRESERVATIVE-TREATED AND/OR FIRE-RETARDANT-TREATED WOOD SHALL BE HOT DIPPED ZINC-COATED GALVANIZED STEEL, STAINLESS STEEL, SILICON BRONZE OR COPPER. COATING WEIGHTS FOR ZINC-COATED FASTENERS SHALL BE IN ACCORDANCE WITH ASTM A153. FASTENERS OTHER THAN NAILS, TIMBER RIVETS, WOOD SCREWS AND LAG SCREWS SHALL BE PERMITTED TO BE OF MECHANICALLY DEPOSITED ZINC-COATED STEEL WITH COATING WEIGHTS IN ACCORDANCE WITH ASTM B695, CLASS 55 MINIMUM.
   7. ALL CUTS OR HOLES DRILLED IN PRESSURE-TREATED LUMBER AFTER TREATMENT SHALL BE FIELD-TREATED WITH COPPER NAPHTHENATE, THE CONCENTRATION OF WHICH SHALL CONTAIN MINIMUM OF 2% COPPER METAL, BY REPEATED BRUSHING, DIPPING OR SOAKING UNTIL THE WOOD ABSORBS NO MORE PRESERVATIVE.
   8. ALL NEW BLOCKING INSTALLED AGAINST EXISTING JOISTS SHALL HAVE SIMPSON A35 ANCHORS EACH END.
   9. ALL LAG SCREWS SHALL HAVE A CUT THREAD, NOT A ROLLED THREAD. DRILL HOLE FOR THREADED PORTION OF LAG SCREW 75% OF THE SHANK DIAMETER. DRILL HOLE FOR THE SHANK PORTION OF THE SCREW EQUAL TO THE SHANK DIAMETER.

IV. EXPOSURE TO WEATHER

A. STEEL
   4. ALL EXPOSED MEMBERS SHALL BE COATED WITH A ZINC RICH PRIMER.
   5. BOLTS, NUTS AND MISCELLANEOUS HARDWARE SHALL BE GALVANIZED.

B. WOOD
   1. ALL EXTERIOR TIMBER BEAMS SHALL BE PRESSURE TREATED OR WOOD OF NATURAL RESISTANCE TO DECAY.
   2. ALL EXTERIOR HANGERS SHALL BE GALVANIZED. ALL EXTERIOR SIMPSON HANGERS, ANGLE CLIPS, PLATES, ETC. SHALL HAVE ZMAX COATING.
   3. ALL PLYWOOD SHALL BE OF AN EXTERIOR GRADE.

VI. QUALITY CONTROL

A. SPECIAL INSPECTIONS AND/OR TESTING IS REQUIRED FOR THIS CONSTRUCTION. SEE "SPECIAL INSPECTION AND STRUCTURAL OBSERVATION" FORM. THE SPECIAL INSPECTOR SHALL BE SELECTED BY THE OWNER OR HIS/HER REPRESENTATIVE AND APPROVED BY THE DEPARTMENT OF BUILDING INSPECTION PRIOR TO START OF WORK.
B. THE OWNER SHALL EMPLOY THE ENGINEER REGISTERED IN THE STATE OF CALIFORNIA WHO IS RESPONSIBLE FOR THE STRUCTURAL DESIGN TO PERFORM STRUCTURAL OBSERVATION. SEE "SPECIAL INSPECTION AND STRUCTURAL OBSERVATION" FORM. 72 HOURS NOTICE IS REQUIRED FOR MEETINGS AND OBSERVATIONS.

REGISTERED PROFESSIONAL ENGINEER
JASON A. PISANO
NO. C 69708
Exp. 6/30/24
CIVIL
STATE OF CALIFORNIA

RECEIVED
SEP 23 2022
DEPT. OF BUILDING INSPECTION
THIS PLAN MEETS THE QUALITY STANDARD FOR DIGITIZING
ACCEPTED

Stephen Liu, DBI

SEP 23 2022

APPROVED
Dept. of Building Insp.
- San Francisco -
SEP 23 2022
PATRICK O'RIORDAN
DIRECTOR
DEPT. OF BUILDING INSPECTION

HOM-PISANO ENGINEERING, INC. 1406 32nd Ave San Francisco, CA 94122 415.682.4798 hompisano.com	PROJECT DECK REPLACEMENT 175 SOUTHWOOD DRIVE SAN FRANCISCO, CA 94112	PROJECT No. 22-099	SHEET TITLE GENERAL STRUCTURAL NOTES	MILESTONES PROGRESS PLANS 08/25/22 FINAL REVIEW 09/07/22 BLDG. PERMIT SUBM. 09/22/22	SHEET S1.1 SHEET 2 OF 6

NOT INCLUDED IN PERMIT/
FOR REFERENCE ONLY

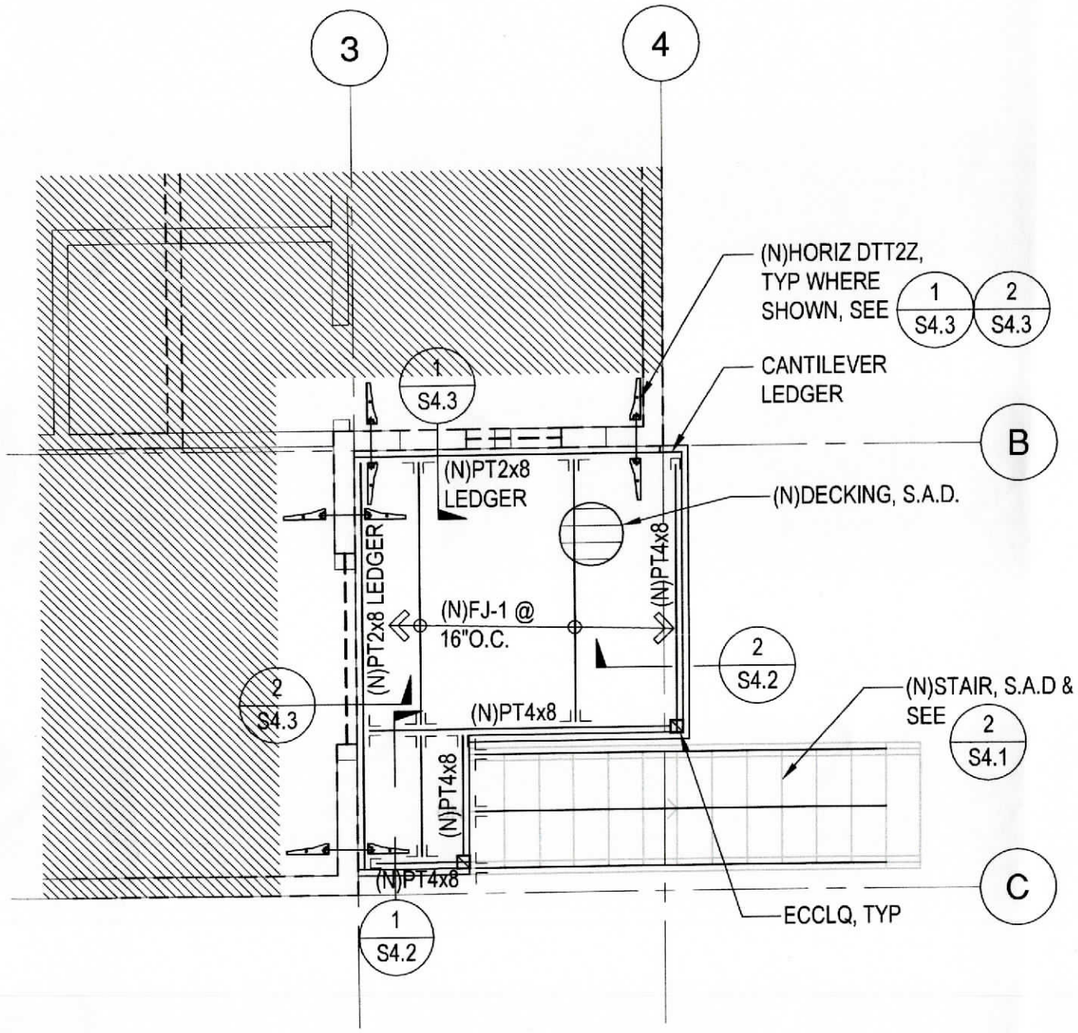

1 DECK FRAMING PLAN

1/4"=1'-0"

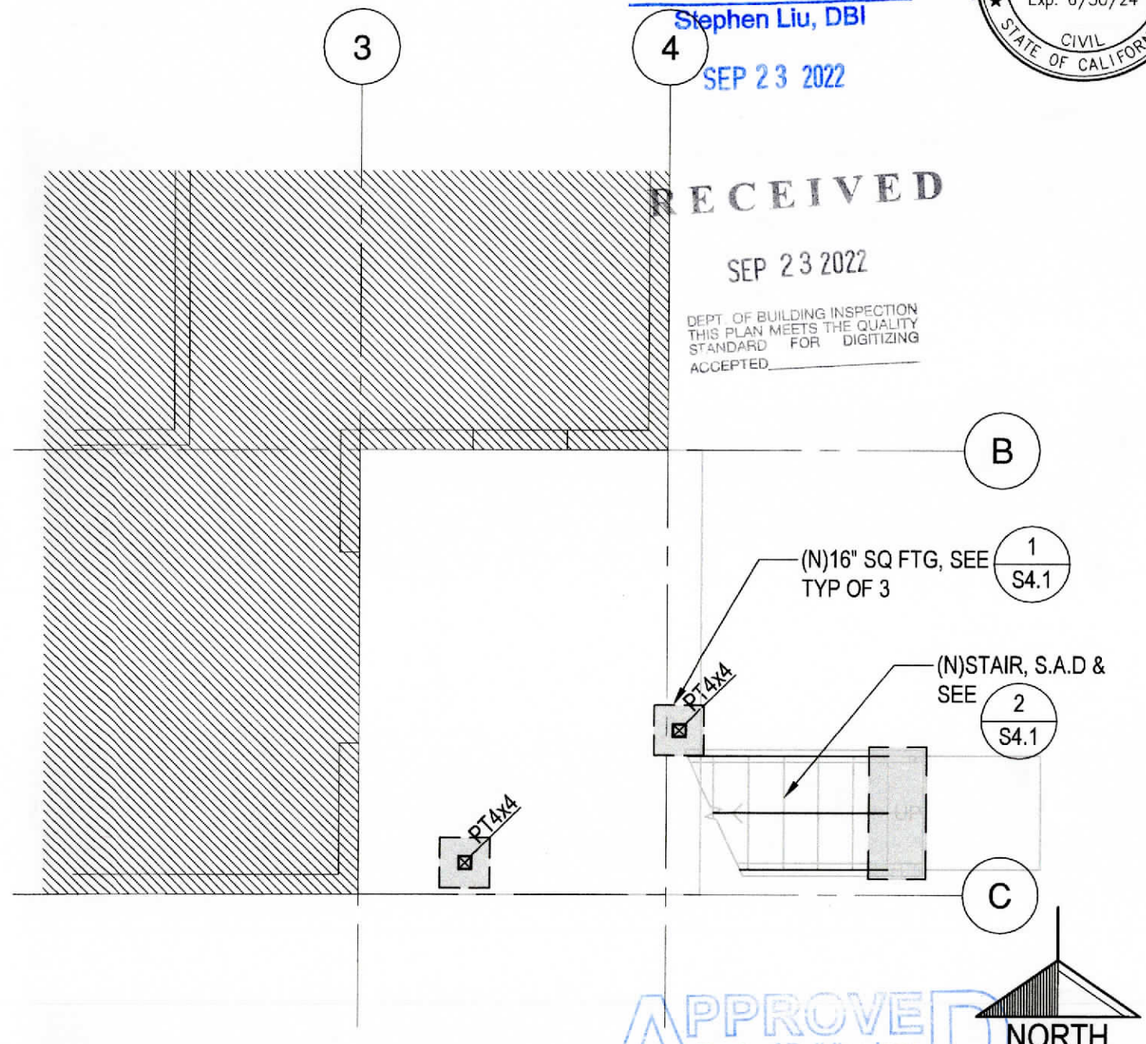

2 DECK FOUNDATION PLAN

1/4"=1'-0"

REGISTERED PROFESSIONAL ENGINEER
JASON A. PISANO
NO. C 69708
Exp. 6/30/24
CIVIL
STATE OF CALIFORNIA

Stephen Liu, DBI
SEP 23 2022

RECEIVED
SEP 23 2022
DEPT. OF BUILDING INSPECTION
THIS PLAN MEETS THE QUALITY STANDARD FOR DIGITIZING
ACCEPTED

APPROVED
Dept. of Building Insp.
- San Francisco -
SEP 23 2022

PATRICK O'RIORDAN
DIRECTOR
DEPT. OF BUILDING INSPECTION

HOM · PISANO ENGINEERING, INC.
1406 32nd Ave
San Francisco, CA 94122
415.682.4798
hompisano.com

PROJECT
DECK REPLACEMENT

175 SOUTHWOOD DRIVE
SAN FRANCISCO, CA
94112

PROJECT No.
22-099

SHEET TITLE
DECK FRAMING & FOUNDATION PLANS

MILESTONES
PROGRESS PLANS 08/25/22
FINAL REVIEW 09/07/22
BLDG. PERMIT SUBM. 09/22/22

SHEET
S2.1
SHEET 3 OF 6

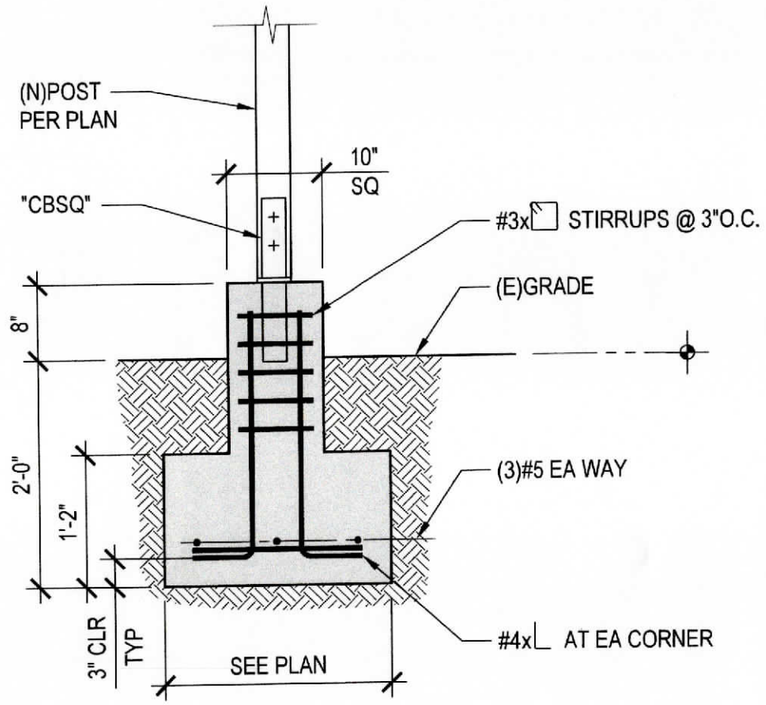

1 (N)SQUARE FOOTING DETAIL

¾"=1'-0"

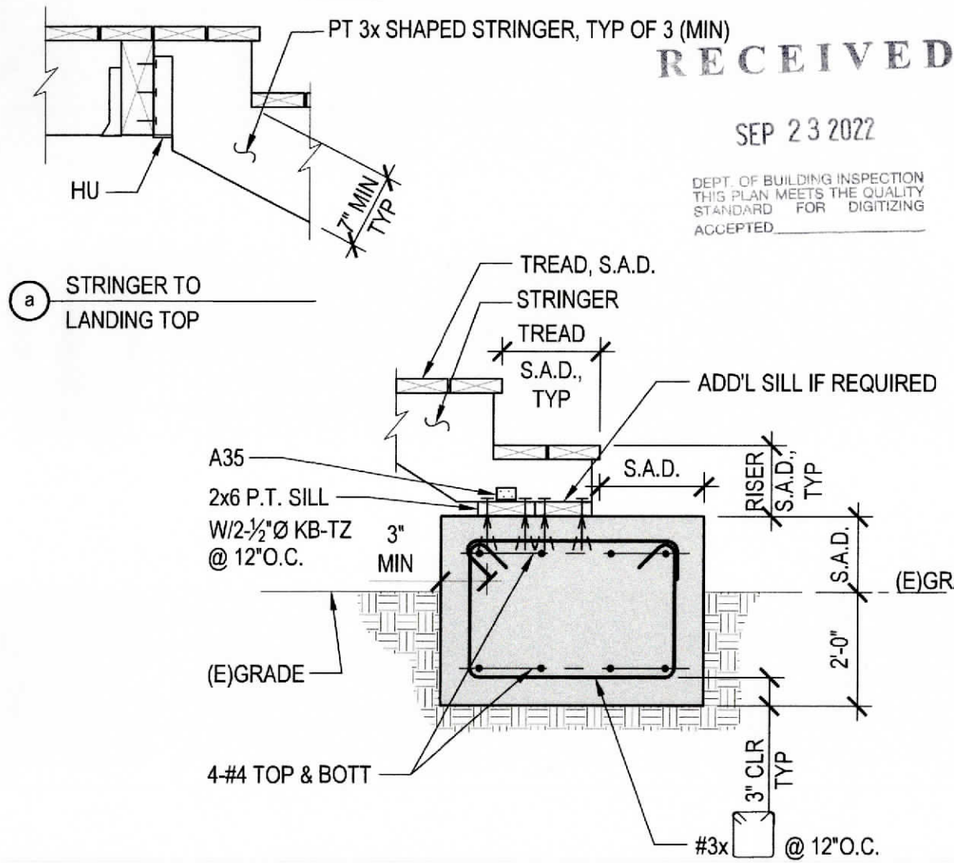

2 EXTERIOR STAIR DETAILS

¾"=1'-0"

Stephen Liu, DBI

SEP 23 2022

REGISTERED PROFESSIONAL ENGINEER
JASON A. PISANO
NO. C 69708
Exp. 6/30/24
CIVIL
STATE OF CALIFORNIA

RECEIVED

SEP 23 2022

DEPT. OF BUILDING INSPECTION
THIS PLAN MEETS THE QUALITY STANDARD FOR DIGITIZING
ACCEPTED

APPROVED
Dept. of Building Insp.
- San Francisco -
SEP 23 2022

PATRICK O'RIORDAN
DIRECTOR
DEPT. OF BUILDING INSPECTION

HOM·PISANO ENGINEERING, INC.
1406 32nd Ave
San Francisco, CA 94122
415.682.4798
hompisano.com

PROJECT
DECK REPLACEMENT

175 SOUTHWOOD DRIVE
SAN FRANCISCO, CA
94112

PROJECT No.
22-099

SHEET TITLE
CONCRETE & WOOD DETAILS

MILESTONES
PROGRESS PLANS 08/25/22
FINAL REVIEW 09/07/22
BLDG. PERMIT SUBM. 09/22/22

SHEET
S4.1
SHEET 4 OF 6

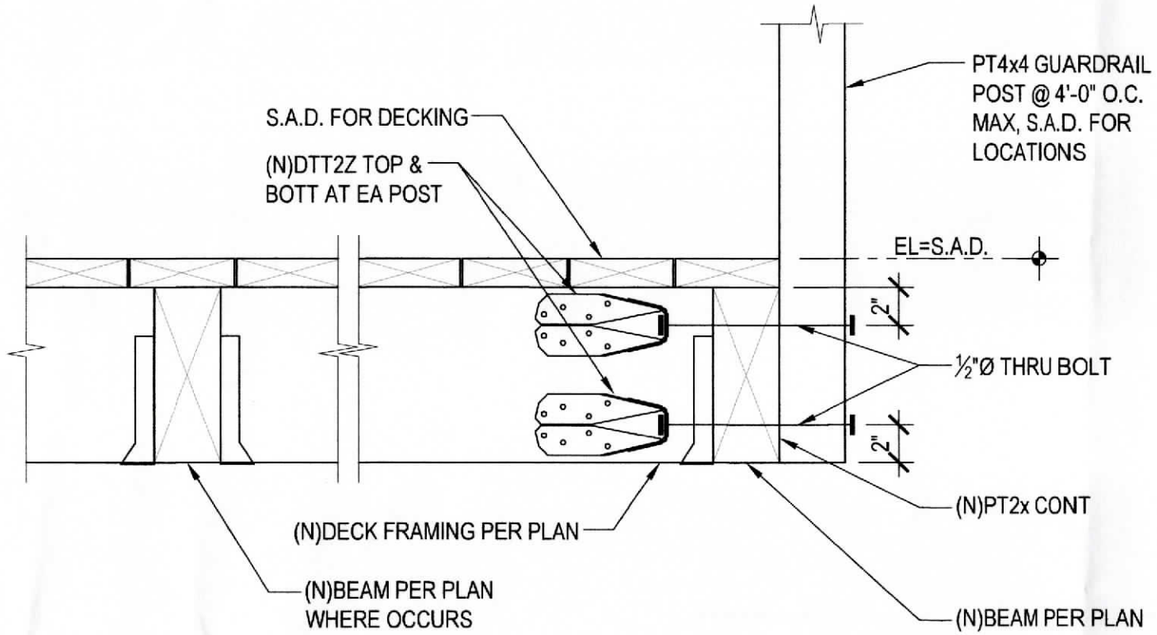

1 (N)DECK DETAIL AT BEAM FRAMING PERPENDICULAR TO BEAM

1½"=1'-0"

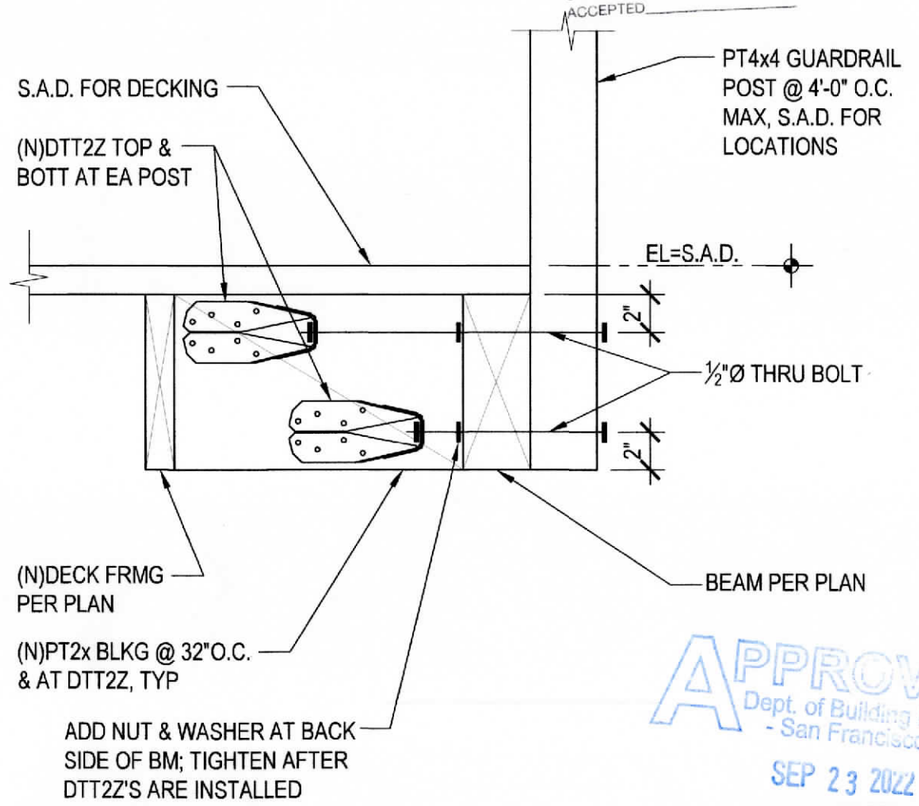

2 (N)DECK DETAIL AT BEAM FRAMING PARALLEL TO BEAM

1½"=1'-0"

REGISTERED PROFESSIONAL ENGINEER
JASON A. PISANO
NO. C 69708
Exp. 6/30/24
CIVIL
STATE OF CALIFORNIA

Stephen Liu, DBI
SEP 23 2022

RECEIVED
SEP 23 2022
DEPT. OF BUILDING INSPECTION
THIS PLAN MEETS THE QUALITY STANDARD FOR DIGITIZING
ACCEPTED

APPROVED
Dept. of Building Insp.
- San Francisco -
SEP 23 2022
PATRICK O'RIORDAN
DIRECTOR
DEPT. OF BUILDING INSPECTION

HOM-PISANO ENGINEERING, INC.
1406 32nd Ave
San Francisco, CA 94122
415.682.4798
hompisano.com

PROJECT
DECK REPLACEMENT
175 SOUTHWOOD DRIVE
SAN FRANCISCO, CA
94112

PROJECT No.
22-099

SHEET TITLE
WOOD DETAILS

MILESTONES
PROGRESS PLANS 08/25/22
FINAL REVIEW 09/07/22
BLDG. PERMIT SUBM. 09/22/22

SHEET
S4.2

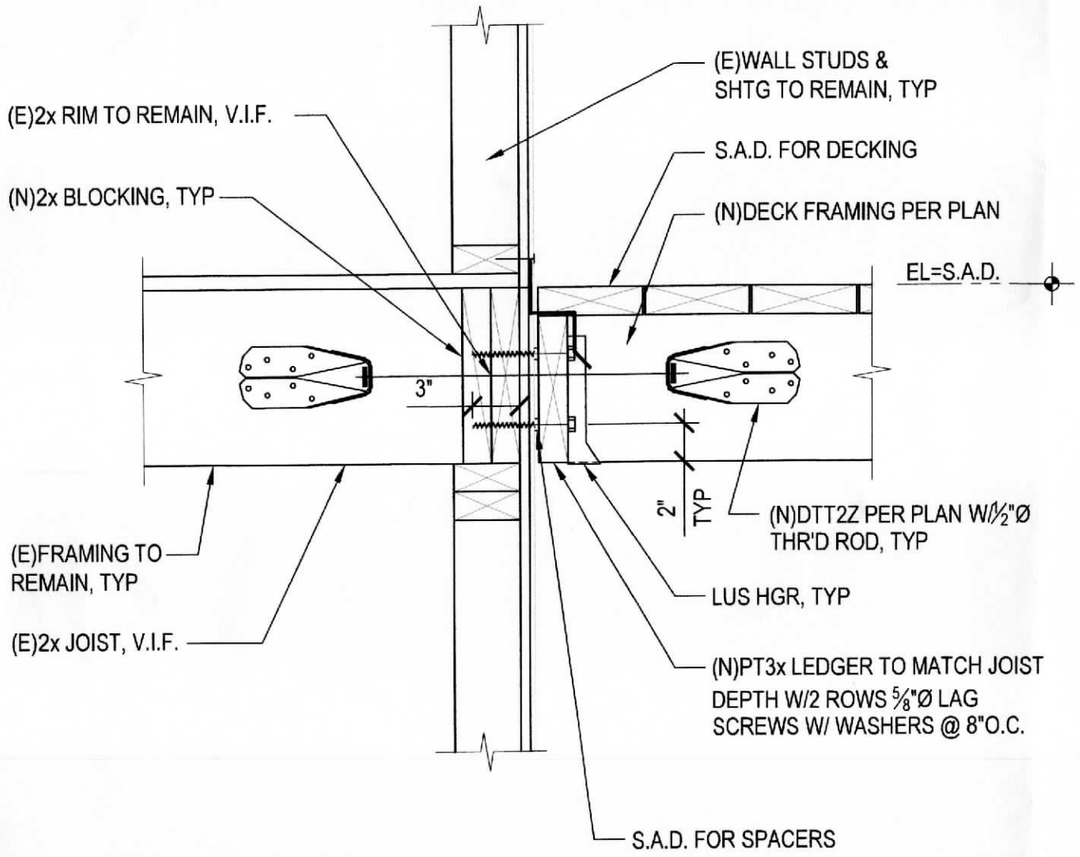

1 (N)DECK DETAIL AT LEDGER FRAMING PERPENDICULAR TO WALL

1½"=1'-0"

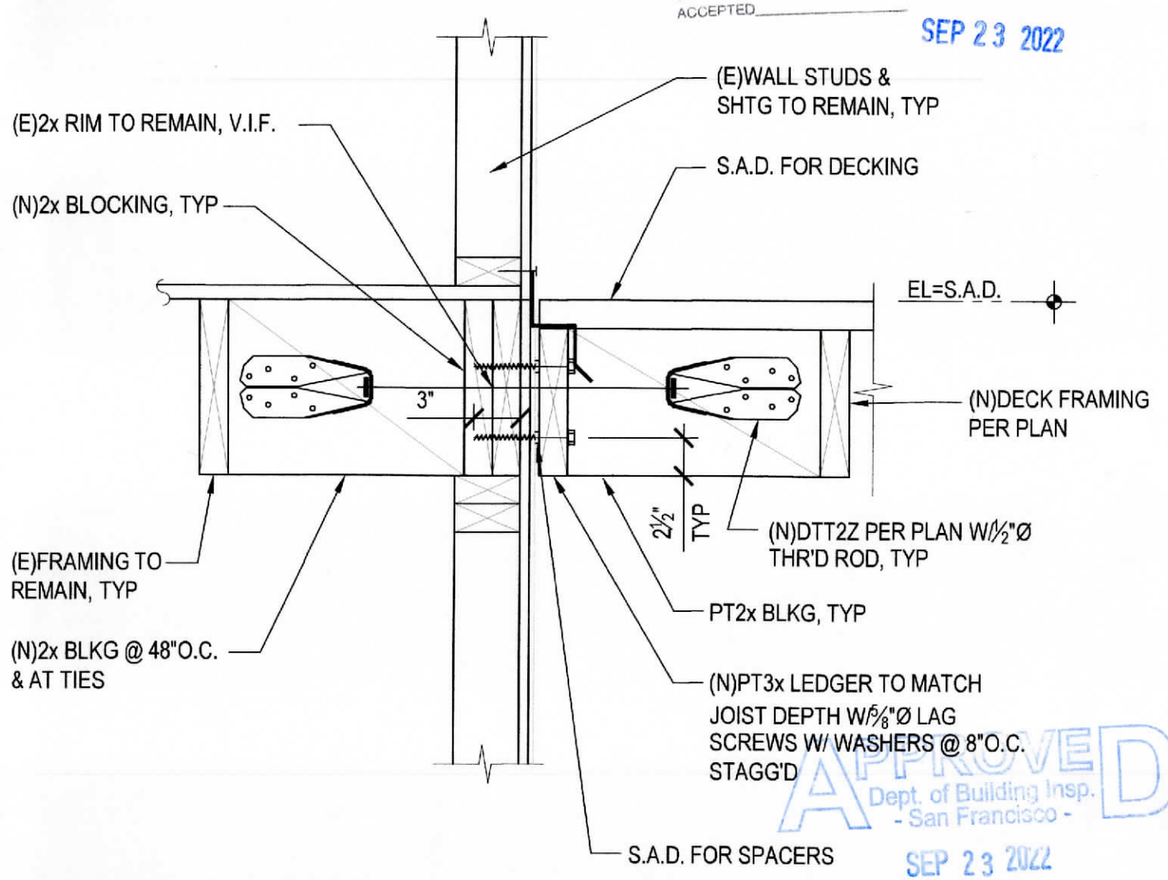

2 (N)DECK DETAIL AT LEDGER FRAMING PARALLEL TO WALL

REGISTERED PROFESSIONAL ENGINEER
JASON A. PISANO
NO. C 69708
Exp. 6/30/24
CIVIL
STATE OF CALIFORNIA

RECEIVED
SEP 23 2022
DEPT. OF BUILDING INSPECTION
THIS PLAN MEETS THE QUALITY STANDARD FOR DIGITIZING
ACCEPTED Stephen Liu, DBI
SEP 23 2022

APPROVED
Dept. of Building Insp.
- San Francisco -
SEP 23 2022

PATRICK O'RIORDAN
DIRECTOR
DEPT. OF BUILDING INSPECTION

HOM · PISANO ENGINEERING, INC.
1406 32nd Ave
San Francisco, CA 94122
415.682.4798
hompisano.com

PROJECT
DECK REPLACEMENT
175 SOUTHWOOD DRIVE
SAN FRANCISCO, CA
94112

PROJECT No.
22-099

SHEET TITLE
WOOD DETAILS

MILESTONES
PROGRESS PLANS 08/25/22
FINAL REVIEW 09/07/22
BLDG. PERMIT SUBM. 09/22/22

SHEET
S4.3
SHEET 6 OF 6

City and County of San Francisco
Department of Building Inspection

London N. Breed, Mayor
Patrick O'Riordan, Interim Director

NOTICE

SPECIAL INSPECTION REQUIREMENTS

Please note that the Special Inspections shown on the approved plans and checked on the Special Inspections form issued with the permit are required for this project. The employment of special inspectors is the direct responsibility of the owner or the engineer/architect of record acting as the owner's representative.

These special inspections are required *in addition to* the called inspections performed by the Department of Building Inspection. The name of the special inspector shall be furnished to the district building inspector prior to start of work for which special inspection is required.

For questions regarding the details or extent of required inspection or tests, please call the Plan Checker assigned to this project or **628-652-3407**. If there are any field problems regarding special inspection, please call your District Building Inspector or 628-652-3400 Ext 1.

Before final building inspection is scheduled, documentation of special inspection compliance must be submitted to and approved by the Special Inspection Services staff. To avoid delays in this process, the project owner should request final compliance reports from the architect or engineer of record and/or special inspection agency soon after the conclusion of work requiring special inspection. ***The permit will not be finalized without compliance with the special inspection requirements.***

STRUCTURAL OBSERVATION REQUIREMENTS

Structural observation shall be provided as required per Section 1704.6. **The building permit will not be finalized without compliance with the structural observation requirements.**

Special Inspection Services Contact Information

1. **Telephone: (628) 652-3407**
2. **Email: dbi.specialinspections@sfgov.org**
3. **In person: 49 South Van Ness Ave – Suite 400**

Note: We are moving towards a "paperless" mode of operation. All special inspection submittals, including final letters, may be emailed (preferred) or faxed. We will also be shifting to a paperless fax receipt mode.

Special Inspection Services
49 South Van Ness Ave – Suite 400 – San Francisco CA 94103
Office (628) 652-3407 – www.sfdbi.org

Updated 10/05/2020

SPECIAL INSPECTION AND STRUCTURAL OBSERVATION

A COPY OF THIS DOCUMENT SHALL BE KEPT WITH THE APPROVED STRUCTURAL DRAWING SET

JOB ADDRESS 175 SOUTHWOOD DRIVE APPLICATION NO. 2022 0722 9084 ADDENDUM NO. ____

OWNER NAME _____ OWNER PHONE NO. (____) _____

Employment of Special Inspection is the direct responsibility of the OWNER, or the engineer/architect of record acting as the owner's representative. Special inspector shall be one of those as prescribed in Sec. 1704. Name of special inspector shall be furnished to DBI District Inspector prior to start of the work for which the Special Inspection is required. Structural observation shall be performed as provided by Section 1704.6. A preconstruction conference is recommended for owner/builder or designer/builder projects, complex and high-rise projects, and for projects utilizing new processes or materials.

In accordance with Chapter 17 (SFBC), Special Inspection and/or testing is required for the following work:

1. [ ] Concrete (Placement & sampling)
2. [ ] Bolts installed in concrete
3. [ ] Special moment - Resisting concrete frame
4. [■] Reinforcing steel ~~and prestressing tendons~~
5. **Structural welding:**
   - **A. Periodic visual inspection**
   - [ ] Single pass fillet welds 5/16" or smaller
   - [ ] Steel deck
   - [ ] Welded studs
   - [ ] Cold formed studs and joists
   - [ ] Stair and railing systems
   - [ ] Reinforcing steel
   - **B. Continuous visual inspection and NDT** (Section 1704)
   - [ ] All other welding (NDT exception: Fillet weld)
   - [ ] Reinforcing steel; and [ ] NDT required
   - [ ] Moment-resisting frames
   - [ ] Others _____
6. [ ] High-strength bolting
7. [ ] Structural masonry
8. [ ] Reinforced gypsum concrete
9. [ ] Insulating concrete fill
10. [ ] Sprayed-on fireproofing
11. [ ] Piling, drilled piers and caissons
12. [ ] Shotcrete
13. [ ] Special grading, excavation and filling (Geo. Engineered)
14. [ ] Smoke-control system
15. [ ] Demolition
16. [ ] Exterior Facing
17. **Retrofit of unreinforced masonry buildings:**
    - [ ] Testing of mortar quality and shear tests
    - [ ] Inspection of repointing operations
    - [ ] Installation inspection of new shear bolts
    - [ ] Pre-installation inspection for embedded
    - [ ] Pull/torque tests per SFBC Sec.1607C & 1615C
18. **Bolts Installed in existing concrete or masonry:**
    - [ ] Concrete [ ] Masonry
    - [ ] Pull/torque tests per SFEBC Sec. 507C & 515C
19. [ ] Shear walls and floor systems used as shear diaphragms
20. [ ] Holdowns
21. **Special cases:**
    - [ ] Shoring
    - [ ] Underpinning:[ ] Not affecting adjacent property
    - [ ] Affecting adjacent property: PA_____
    - [ ] Others
22. [ ] Crane safety (Apply to the operation of tower cranes on high-rise building) (Section 1705.22)
23. [ ] Others: "As recommended by professional of record" _____

24. **Structural observation per Sec. 1704.6 (SFBC) for the following:** [■] Foundations [ ] Steel framing [ ] Concrete construction [ ] Masonry construction [■] Wood framing [ ] Other: _____
25. Certification is required for: [ ] Glu-lam components
26. [ ] Firestops in high-rise building

Prepared by: JASON A. PISANO, P.E. Phone: (415) 682-4798
Engineer/Architect of Record

Required information:
FAX: (415) 682-4787 Email pisano@hompisano.com

APPROVED
Dept. of Building Insp.
- San Francisco -
SEP 23 2022

Review by: Stephen Liu, DBI Phone: (628) 652-
DBI Engineer or Plan Checker
SEP 23 2022

****

APPROVAL (Based on submitted reports.)

PATRICK O'RIORDAN
DIRECTOR
DEPT. OF BUILDING INSPECTION

DATE DBI Engineer or Plan Checker / Special Inspection Services Staff

QUESTIONS ABOUT SPECIAL INSPECTION AND STRUCTURAL OBSERVATION SHOULD BE DIRECTED TO:
Special Inspection Services (628) 652-3407; or, dbi.specialinspections@sfgov.org

Updated 10/05/2020

City and County of San Francisco
Department of Building Inspection

London N. Breed, Mayor
Tom C. Hui, S.E., C.B.O., Director

Attachment A

SLOPE AND SEISMIC HAZARD ZONE PROTECTION CHECKLIST

A COPY OF THIS DOCUMENT SHALL BE SUBMITTED WITH THE PERMIT APPLICATION

JOB ADDRESS 175 SOUTHWOOD DR. **APPLICATION NO.** 2022 0922 9084 **ADDENDUM NO.** ____

OWNER NAME _____ **OWNER PHONE NO.** ( )

1: PROPERTY LOCATION		
EARTHQUAKE INDUCED LANDSLIDE AREA ON THE STATE OF CALIFORNIA DEPARTMENT OF CONSERVATION DIVISION OF MINES AND GEOLOGY (CDMG) SEISMIC HAZARD ZONES MAP FOR SAN FRANCISCO, RELEASED NOVEMBER 17, 2000.	YES ☐	NO ■

2: AVERAGE SLOPE OF PROPERTY		
PROPERTY EXCEEDING AN AVERAGE SLOPE OF 4H:1V (25%) GRADE *(APPLICANT WILL NEED TO INCLUDE PLANS ILLUSTRATING SLOPE OF THE PROPERTY AND/OR INCLUDE A SURVEY VERIFYING THE SLOPE OF THE PROPERTY)*	YES ☐	NO ■

3: PROPOSED CONSTRUCTION		
CONSTRUCTION OF NEW BUILDING OR STRUCTURE HAVING OVER 1000 SQFT OF NEW PROJECTED ROOF AREA	YES ☐	NO ■
HORIZONTAL OR VERTICAL ADDITIONS HAVING OVER 500 SQFT OF NEW PROJECTED ROOF AREA	YES ☐	NO ■
SHORING	YES ☐	NO ■
UNDERPINNING	YES ☐	NO ■
GRADING, INCLUDING EXCAVATION OR FILL, OF OVER 50 CUBIC YARDS OF EARTH MATERIAL	YES ☐	NO ■
CONSTRUCTION ACTIVITY LISTED BELOW DETERMINED BY THE BUILDING OFFICIAL THAT MAY HAVE A SUBSTANTIAL IMPACT ON THE SLOPE STABILITY:		
RETAINING WALL:	YES ☐	NO ■
OTHERS: _____	YES ☐	NO ■

SECTION 4: LICENSED DESIGN PROFESSIONAL VERIFICATION AND SIGNATURES

Under penalty of perjury, I certify that the information provided on this form is based on my personal review of the building and its records, or review by others acting under my direct supervision, and is correct to the best of my knowledge.

Prepared by: JASON A. PISANO, P.E.
Engineer/Architect of Record

(415) 682-4798
Telephor

pisano@hompisano.com
Email

Signature

09/22/22
Date

REGISTERED PROFESSIONAL ENGINEER
JASON A. PISANO
NO. C 69708
Exp. 6/30/24
CIVIL
STATE OF CALIFORNIA

Technical Services Division
1660 Mission Street– San Francisco CA 94103
Office (415) 558-6205 – FAX (415) 558-6401 – www.sfdbi.org

FOR DBI USE ONLY

ASSIGNMENT OF REVIEW TIER

EXEMPTED: Reports per Section E and Third Party Peer Review Not Required

☒ If the box in Section 1 "Property Location" **AND** the box in Section 2 "Average Slope of Property" are marked "No" **OR** if all the boxes in Section 3 "Proposed Construction" are marked "No", reports per Section E and Third Party Peer Review are exempted by the SSPA.

TIER I: Reports per Section E Required but Third Party Peer Review Not Required

☐ If the box in Section 2 "Average Slope of Property" **AND** any boxes in Section 3 "Proposed Construction" are marked "Yes" **AND** the property does not lie within any areas of potential landslide hazard, DBI shall require mandatory submittal of reports per Section E only.

TIER II: Reports per Section E and Third Party Peer Review Required

☐ If the box in Section 2 "Average Slope of Property" **AND** any boxes in Section 3 "Proposed Construction" are marked "Yes" **AND** the property lies within the areas of potential landslide hazard, DBI shall require mandatory submittal of reports per Section E and require the permit application be subject to a third party peer review. At the discretion of the SSPA Review Committee, the peer review may be followed by the establishment of a Structural Advisory Committee (SAC) with the project reassigned to Tier III.

If the DBI Plan Review Engineer (or the SSPA Review Committee, if established), in their discretion, determines from the submitted documents that the project has a substantial impact on the slope stability of the site or creates a potential for earthquake induced landslide hazards, DBI may require that the third party peer review be followed by the establishment of a Structural Advisory Committee (SAC) and re-assigned the project to Tier III.

TIER III: Structural Advisory Committee (SAC) Review

☐ If the box in Section 1 "Property Location" **AND** any boxes in Section 3 "Proposed Construction" are marked "Yes", DBI shall require mandatory submittal of reports per Section E and require the permit application be subject to review by a Structural Advisory Committee (SAC), as defined by SFBC Section 105A.6.

Tier assigned by: Exempted
DBI Plan Review Engineer
Stephen Liu, DBI
SEP 23 2022

Phone: (415)

Comment: _____

APPROVED
Dept. of Building Insp.
- San Francisco -
SEP 23 2022

PATRICK O'RIORDAN
DIRECTOR
DEPT. OF BUILDING INSPECTION

PUBLIC COMMENT

From: Rui Hirakawa
To: BoardofAppeals (PAB)
Subject: APPEAL NO. 22-070
Date: Tuesday, November 1, 2022 11:54:32 AM

This message is from outside the City email system. Do not open links or attachments from untrusted sources.

Regarding the backyard structure at 175 Southwood Drive, as a neighbor I feel that as long as it is not a safety hazard, I have no objections. So little of it can be seen fr the sidewalk and what is visible is attractive so I hope that my neighbors will be allowed to keep and enjoy it.

Rui H-Wong