BOARD OF APPEALS, CITY & COUNTY OF SAN FRANCISCO

Appeal of
PETER HOLOYDA, Appellant(s)
vs.
DEPARTMENT OF BUILDING INSPECTION, PLANNING DEPARTMENT APPROVAL Respondent

Appeal No. **24-046**

NOTICE OF APPEAL

NOTICE IS HEREBY GIVEN THAT on August 15, 2024, the above named appellant(s) filed an appeal with the Board of Appeals of the City and County of San Francisco from the decision or order of the above named department(s), commission, or officer.

The substance or effect of the decision or order appealed from is the ISSUANCE on August 6, 2024 to Carlos Villicana, of an Alteration Permit (revision to Permit Application No. 2022/0603/5607; adding a standing deck to attached Accessory Dwelling Unit (ADU) with spiral stair leading up to the deck (single family and ADU) at 763 Lakeview Avenue.

APPLICATION NO. 2023/08/25/5349

FOR HEARING ON September 25, 2024

Address of Appellant(s):	Address of Other Parties:
Peter Holoyda, Appellant(s) 765 Lakeview Avenue San Francisco, CA 94112	Carlos Villicana, Permit Holder(s) c/o Daniel Vargas, Agent for Permit Holder(s) 3518 Arden Road Hayward, CA 94545

Date Filed: August 15, 2024

CITY & COUNTY OF SAN FRANCISCO
BOARD OF APPEALS

PRELIMINARY STATEMENT FOR APPEAL NO. 24-046

I / We, **Peter Holoyda**, hereby appeal the following departmental action: **ISSUANCE** of **Alteration Permit No. 2023/08/25/5349** by the **Department of Building Inspection** which was issued or became effective on: **August 6, 2024**, to: **Carlos Villicana,** for the property located at: **763 Lakeview Avenue**.

BRIEFING SCHEDULE:

Appellant's Brief is due on or before: 4:30 p.m. on **September 5, 2024**, **(no later than three Thursdays prior to the hearing date)**. The brief may be up to 12 pages in length with unlimited exhibits. It shall be double-spaced with a minimum 12-point font. An electronic copy shall be emailed to: boardofappeals@sfgov.org, julie.rosenberg@sfgov.org, corey.teague@sfgov.org, tina.tam@sfgov.org and daniel@skdhomes.net

Respondent's and Other Parties' Briefs are due on or before: 4:30 p.m. on **September 19, 2024**, **(no later than one Thursday prior to hearing date)**. The brief may be up to 12 pages in length with unlimited exhibits. It shall be doubled-spaced with a minimum 12-point font. An electronic copy shall be emailed to: boardofappeals@sfgov.org, julie.rosenberg@sfgov.org, corey.teague@sfgov.org, tina.tam@sfgov.org and phowavev@gmail.com

Hard copies of the briefs do NOT need to be submitted to the Board Office or to the other parties.

Hearing Date: **Wednesday, September 25, 2024, 5:00 p.m., Room 416 San Francisco City Hall, 1 Dr. Carlton B. Goodlett Place.** The parties may also attend remotely via Zoom. Information for access to the hearing will be provided before the hearing date.

All parties to this appeal must adhere to the briefing schedule above, however if the hearing date is changed, the briefing schedule MAY also be changed. Written notice will be provided of any changes to the briefing schedule.

In order to have their documents sent to the Board members prior to hearing, **members of the public** should email all documents of support/opposition no later than one Thursday prior to hearing date by 4:30 p.m. to boardofappeals@sfgov.org. Please note that names and contact information included in submittals from members of the public will become part of the public record. Submittals from members of the public may be made anonymously.

Please note that in addition to the parties' briefs, any materials that the Board receives relevant to this appeal, including letters of support/opposition from members of the public, are distributed to Board members prior to hearing. All such materials are available for inspection on the Board's website at www.sfgov.org/boa. You may also request a hard copy of the hearing materials that are provided to Board members at a cost of 10 cents per page, per S.F. Admin. Code Ch. 67.28.

The reasons for this appeal are as follows:

See attachment to the preliminary Statement of Appeal.

Appellant or Agent:

Signature: Via Email

Print Name: Peter Holoyda, appellant

Statement:

Rooftop deck at 765 LAKEVIEW AV

Issues with permit —

- Total Elimination of privacy of entire rear of property

- Increase in noise as proposed deck ~~to~~ is at main door, wall of living room and existing window.

- ~~Re~~ Proposed Deck dramatically reduces light through adjacent light well / windows

Permit Details Report

Report Date: **8/15/2024 12:10:18 PM**

Application Number:	202308255349
Form Number:	3
Address(es):	7054 / 051 / 0 763 LAKEVIEW AV
Description:	REVISION TO PA# 202206035607. ADDING A STANDING DECK TO ATTACHED ADU with Sprial stair LEADING UP TO THE DECK. (SINGLE FAMILY + ADU)
Cost:	$30,000.00
Occupancy Code:	R-3
Building Use:	27 - 1 FAMILY DWELLING

Disposition / Stage:

Action Date	Stage	Comments
8/25/2023	TRIAGE	
8/25/2023	FILING	
8/25/2023	FILED	
8/1/2024	APPROVED	
8/6/2024	ISSUED	

Contact Details:

Contractor Details:

License Number:	1104144
Name:	ALLAN FRANCISCO MEJIA
Company Name:	AKD HOMES INC.
Address:	3818 ARDEN RD * HAYWARD CA 94545-0000
Phone:	

Addenda Details:

Description:

Station	Rev#	Arrive	Start	In Hold	Out Hold	Finish	Checked By	Review Result	Hold Description
CPB		8/31/23	9/11/23			9/11/23	SONG SUSIE	Administrative	9/11/23: PAYMENT RECEIVED. TO PPC. SS 8/31/23: PENDING PAYMENT. SS 8/29/23: EPR SUBMISSION. EMAILED APPLICANT TO VERIFY SCOPE OF WORK.
CP-ZOC		9/11/23	1/23/24			1/23/24	BOTN KURT	Issued Comments	1/22/24: Comments issued to applicant - KB 9/14/2023 - Issued Incomplete Application No. 1 to daniel@akdhomes.net. (L. Cook) 10/12/2023 - Issued IAN No. 2 to daniel@akdhomes.net. (L. Cook) 11/15/2023 - Issued Complete Application Notice to Daniel@akdhomes.net. (L. Cook)
CP-ZOC	1	4/1/24	4/1/24			4/1/24	BOTN KURT	Approved	Revision to BPA 202206035607 to add roof deck within the buildable area.
BLDG		4/1/24	5/24/24			5/24/24	LIU CHU	Issued Comments	
BLDG	1	6/7/24	6/27/24			6/27/24	LIU CHU	Approved	
SFFD		4/1/24	4/3/24			4/3/24	UNTALAN JAMES	Approved	Routed to Gauer bb 4/2/24. LP Approved for Fire access only and if sprinklers are required provide water flow information. JDU 04/03/2024. james.untalan@sfgov.org
DPW-BSM		4/1/24	4/8/24			4/8/24	CHOY CLINTON	Approved	No alteration or reconstruction of City Right-of-Way under this permit.
DPW-BUF		4/8/04	4/26/24			4/26/24	NAWBARY SUSAN	Approved	BUF does not need new station, this BPA does not

									trigger review.
CP-ZOC	1	6/7/24	6/12/24			6/12/24	BOTN KURT	Approved	Re-stamp
SFFD	1	6/7/24	6/10/24			6/10/24	UNTALAN JAMES	Approved	Approved REV3 for Fire access only and if sprinklers are required provide water flow information. JDU 06/10/2024. james.untalan@sfgov.org
DPW-BSM	1	6/7/24	6/10/24			6/10/24	DENNIS RASSENDYLL	Approved	6.10.2024 Approve. EPR- No alteration or construction of City Right-of-Way under this permit . -RD
DPW-BSM		6/10/24	6/10/24			6/10/24	DENNIS RASSENDYLL	Approved	6.10.2024 Approve. EPR- No alteration or construction of City Right-of-Way under this permit . -RD
DPW-BUF	1	6/7/24	6/28/24			6/28/24	NAWBARY SUSAN	Approved	
CP-ZOC		7/11/24	7/11/24			7/11/24	BOTN KURT	Approved	Re-stamp
BLDG		7/11/24	7/18/24			7/18/24	LIU CHU	Approved	
SFFD		7/11/24	7/16/24			7/16/24	WOO JASON	Approved	rev4 rechecked and approved for fire access only-jason.woo@sfgov.org 7/16/24
DPW-BSM		7/11/24	7/11/24			7/11/24	DENNIS RASSENDYLL	Approved	Approve. EPR- No alteration or construction of City Right-of-Way under this permit . -RD
DPW-BUF		7/11/24	7/15/24			7/15/24	NAWBARY SUSAN	Approved	
PPC		9/11/23	9/11/23			7/30/24	PHAM ANH HAI	Administrative	07/30/24 12:14 PM Invite sent to CPB to close out permit; HP 7/18/24: Emailed CP-ZOC to restamp the approval date on application form to match with plan set and PTS (qc ok); kw 7/11/2024: Invite sent to plan checkers to review and stamp REV4 drawing;nl 7/2/24: Emailed applicant to update the drawing index and the expiration date of design professional stamps; kw 6/7/2024: Invite sent to plan checkers to review and stamp REV3 drawing;nl 4/1/24: Invite sent to BLDG, SFFD & DPW-BSM to start electronic plan review; HP 9/11/23: Invite sent to applicant to join BB session; HP 9/11/23: Bluebeam session created, invite sent to CP-ZOC to start electronic plan review; HP
CPB		7/30/24	8/1/24			8/6/24	CHAN AMARIS	Administrative	8/06/24: NEW BTRC & DOCS RECEIVE. INVOICE SENT. AMARIS. 8/02/24: CONTRACTOR'S STATMENT & BTRC REQUEST. AMARIS. 8/01/24: SCOPE OF WORK ACCEPTABLE. 25 PAGES. BTRC DELINQUENT. APPROVE. BTRC, DOCS & PAYOR'S INFO REQUEST. AMARIS. 7/31/24: SCOPE OF WORK ON DRAWING DID NOT MATCH WITH APPLICATION & PTS. RETURN TO PPC. AMARIS. VERIFY SFFD FEE AT ISSUANCE

This permit has been issued. For information pertaining to this permit, please call 628-652-3450.

Appointments:

Appointment Date	Appointment AM/PM	Appointment Code	Appointment Type	Description	Time Slots

Inspections:

Activity Date	Inspector	Inspection Description	Inspection Status

Special Inspections:

Addenda No.	Completed Date	Inspected By	Inspection Code	Description	Remarks

For information, or to schedule an inspection, call 628-652-3400 between 8:30 am and 3:00 pm.

Station Code Descriptions and Phone Numbers

Online Permit and Complaint Tracking home page.

Technical Support for Online Services
If you need help or have a question about this service, please visit our FAQ area.

Contact SFGov Accessibility Policies
City and County of San Francisco © 2024

BRIEF SUBMITTED BY THE APPELLANT(S)

Appellant Brief for763 Lakeview Rooftop Deck

This permit (# 2023/08/25/5349) ignores San Francisco design guidelines, good faith, and the rule of law and common decency.

It especially causes disharmony and has caused me mental distress.

My Situation

I am an indigent, disabled senior living adjacent to the proposed project.

I cannot easily escape my own home due to my disability and economic situation.

I am deeply concerned about the violation of my privacy, access to light, a quiet peace, my security and my health. These are basic human rights and believe the City has an obligation to uphold these rights.

Design Reference

Despite City guidelines in “Residential Roof Decks” authored by San Francisco Planning AKD violated all but one of the stated goals.

https://www.sfgov.org/bdappeal/sites/default/files/Item%206,%20Special%20Item%20informational%20presentation%20from%20the%20San%20Francisco%20Planning%20Department.pdf

They are listed on page 5 of the above mentioned documents and listed below.

<u>Quality of Life Impacts</u>

Privacy

Intensity of use and programming

Light / shadowing impacts

Noise

Visual clutter

– Neighbors' sight lines

– Street views

Light pollution

Privacy

The "project" installs a Guard Tower" structure next to my home and property line. Its presence robs me of privacy in my entire backyard; from rear wall of home to lot line. It would be unsightly.

Exhibit A shows picture without detail of human mockup.
Exhibit AA shows picture with human mockup to scale.

Deck would be positioned at my main entrance to my house and along the both upper and lower living room walls with three windows . Noise violation**.**

Exhibit B, Exhibit C and Exhibit LL.

Most, if not all of my presentation points were presented to AKD last October in response to their inquiry as to my position on the project.

Exhibits CPD, CPGM, OC, PFO, VO.

Despite my detailed points of opposition, both customer and contractor went forward without any modifications or alternatives

My first notice that the project was to begin came in the form of the text sent 5 days before work was to commence. Language of text is below;

Hi Peter. I hope you're doing well. I wanted to let you know that the city approved the plans to build the deck on top of my dad's house. I know you oppose it, but it's an important space for our family since we lost most of our backyard to my dad's house(the ADU). In terms of noise, there's not much I can do about construction but if we're ever out there making too much noise please let me know. We'll also do what we can to ensure privacy. I'm happy to talk to you more about it if you want me to call you later today. Construction is scheduled to start next Monday.

Claudia

To the Neighbor and Board

I don’t understand why I must lose the privacy and quiet I enjoy now due to poor planning by neighbor or AKD. I did not plan or build the ADU attached to neighbors house (referred to as “my dad’s house”). Is it really a surprise that square footage of your lot was used to build it?

Intensity and Programming

How, since you are obviously expecting noise and loss of my privacy, were you going to mitigate those concerns with plan approved and construction to start in 5 days!? What mitigation can be expected without being consulted beforehand?

It seems that there is an urgent need of more living space. Is this a deck or an extension under another name?

Are children safer on a rooftop than on the ground?

Presently neighbor and extended family get together approximately once a week. I applaud that. However, I do not want to participate and do not want to sequester myself to the garage because of it.

Further, it is foggy and cold except for a few summer like days. Would I be able to open my windows or door for a fresh breeze without people partying 5 feet away?

Bad Faith Practices

Contractor has made several “previously engineered, but not submitted design “changes” to original permitted ADU hoping that these might be passed after the fact.

The ADU is longer and violates the 4 foot setback rule unlike the original approved plan.

This invites litigious action due to building department complicity by not enforcing a very basic law. While no one was around when inspections first visited, why wasn’t an appointment scheduled to meet with contractor? These errors are forever.

Per plan, are the vent pipes presently protruding through the roof going to be relocated closer to neighbor(me)? Is AKD hoping for another favor from building inspections to pass it off at my permanent expense?

Is the air conditioning unit going to be relocated to be yet closer my doorstep?

I consider this to be in violation of my health, well being and property.

Conclusion:

I request that this permit be permanently denied.

If this deck is built, it will permanently sow disharmony.

Allowing this project rewards bad practices, behavior and sets a bad example.

Contractor has made a mockery of Building Department Ethics and trust.

*There is an alternative to this deck. It is a ground level deck shaped like an “L” at the rear and east of the lot. Same deck space at ground level. It would even cost less and provide the same square footage.

Descriptions of Exhibits

These are located on a separate PPT document titled: "Appellant Exhibits for 763 Lakeview Rooftop Deck"

- **Exhibit A**
  - **Views of Proposed Deck Locations from 765 Lakeview**
- **Exhibit AA View of Staircase and people mockup**
- **Exhibit B**
  - **View of space between 765 Front door and living room window to proposed deck location**
- **Exhibit C**
  - **View from 759 Lakeview toward 763 and side of 765 front door and living room window**
- **Exhibit LL-Lower Level**

    - **View from lower living space window adjacent to party deck**
- **Exhibit CPD-Contractors 2023 proposed design**
- **Exhibit CPGM Contractors proposed goals of meeting**
- **Exhibit OC-Owners Concerns (765) to Contractor October 2023**
- **Exhibit PFO Privacy Fence Option-At 6 ft Now**
- **Exhibit VO Voiced Opposition to Contractor October 2023**

Appellant Exhibits for763 Lakeview Rooftop Deck

- **Exhibit A**
  - **Views of Proposed Deck Locations from 765 Lakeview**
- **Exhibit AA View of Staircase and people mockup**
- **Exhibit B**
  - **View of space between 765 Front door and living room window to proposed deck location**
- **Exhibit C**
  - **View from 759 Lakeview toward 763 and side of 765 front door and living room window**
- **Exhibit LL-Lower Level**
  - **View from lower living space window adjacent to party deck**
- **Exhibit CPD-Contractors 2023 proposed design**
- **Exhibit CPGM Contractors proposed goals of meeting**
- **Exhibit OC-Owners Concerns (765) to Contractor October 2023**
- **Exhibit PFO Privacy Fence Option-At 6 ft Now**
- **Exhibit VO Voiced Opposition to Contractor October 2023**

Privacy: Exhibit A

From 763 southern views no privacy would remain from rear of 765 building wall (left) to rear boundary of property(right).

Privacy: Exhibit AA with Staircase and people mockup

From 763 southern views no privacy would remain from rear of 765 building wall to rear boundary of property.

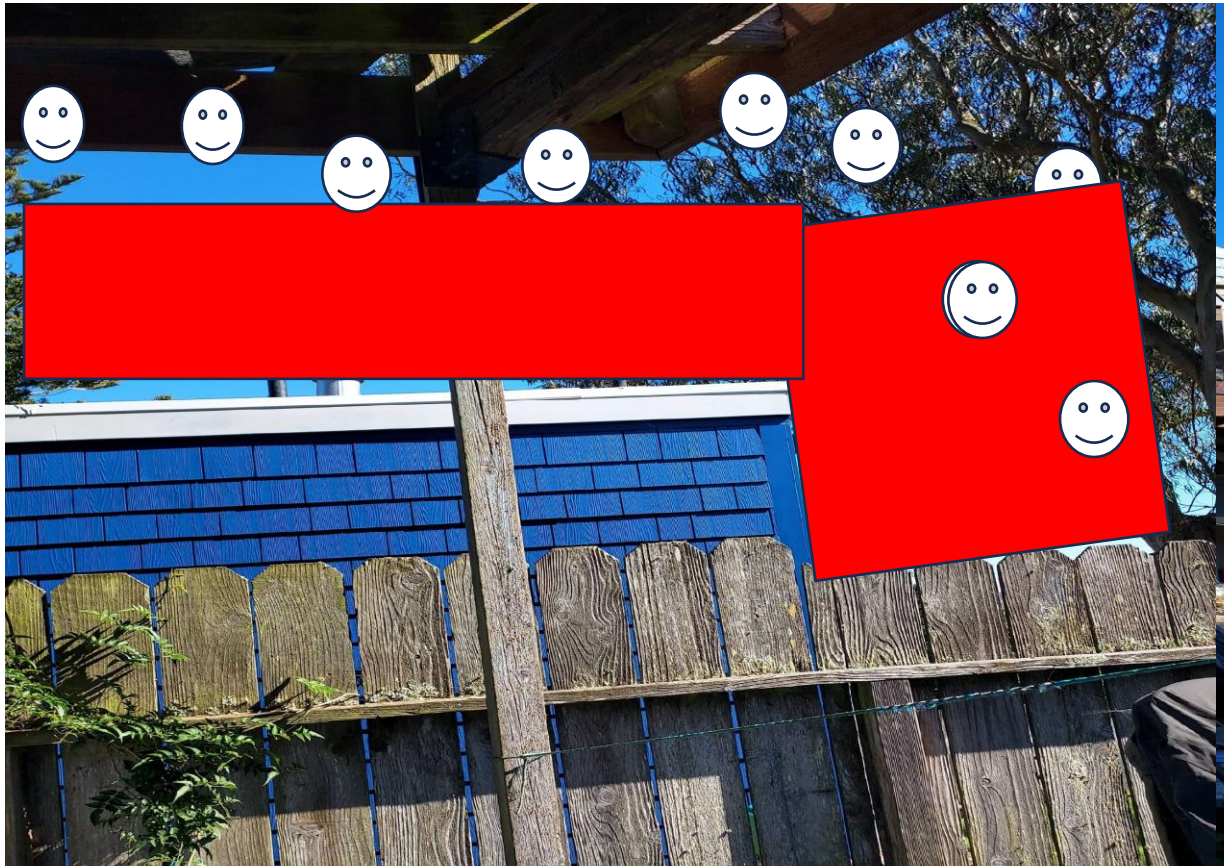

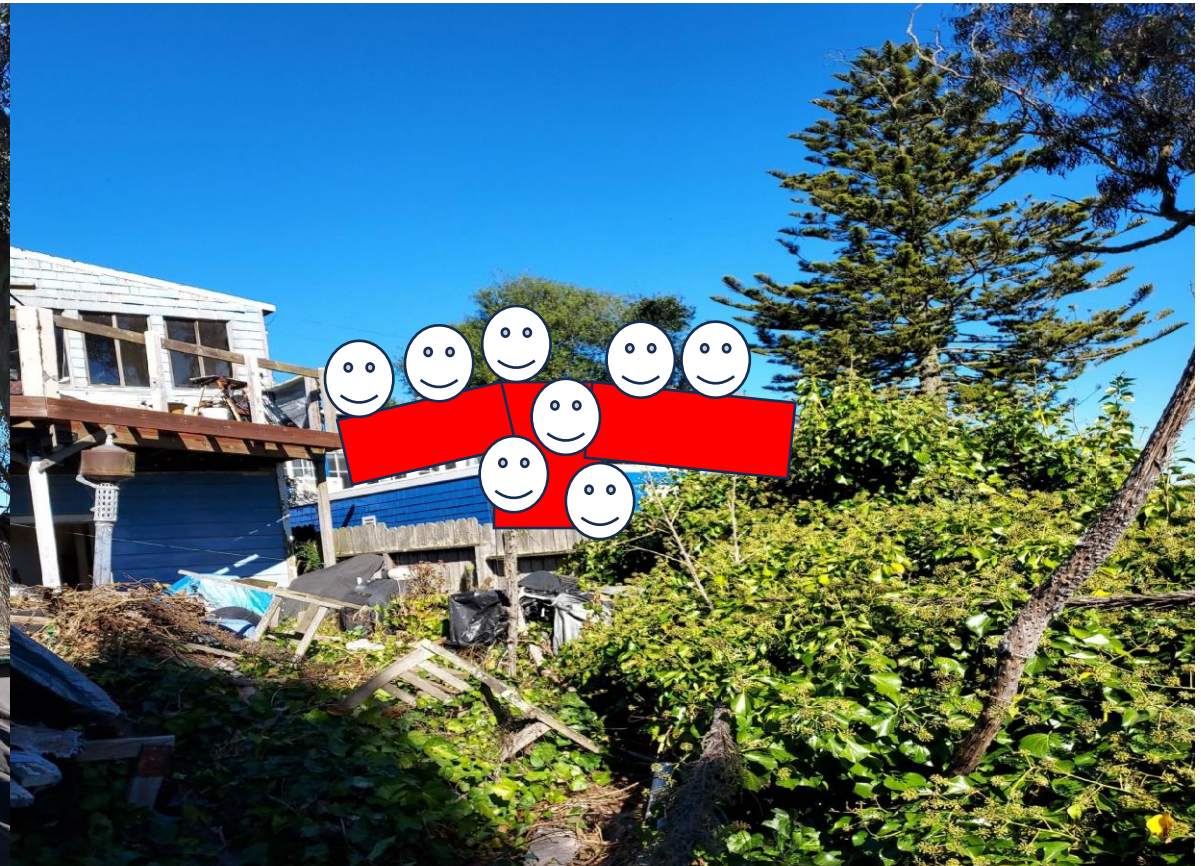

Increased Noise

Direct distance would be 5 feet..Rail to Deck

Exhibit B

Proposed Rooftop Deck Location: At Front Door, Adjacent Windows & Deck

Exhibit C

Further Decreased Light Level in Well
Direct View into main lower floor living space
No Privacy
10 Feet from Party deck

Exhibit LL

Drawing submitted to 765 neighbor on Friday oct.27,2023 at 4:15p.m. 2 working days before this contractor scheduled his invitation to review

Exhibit CPD

Proposed addition: Standing Deck with Spiral Stairs

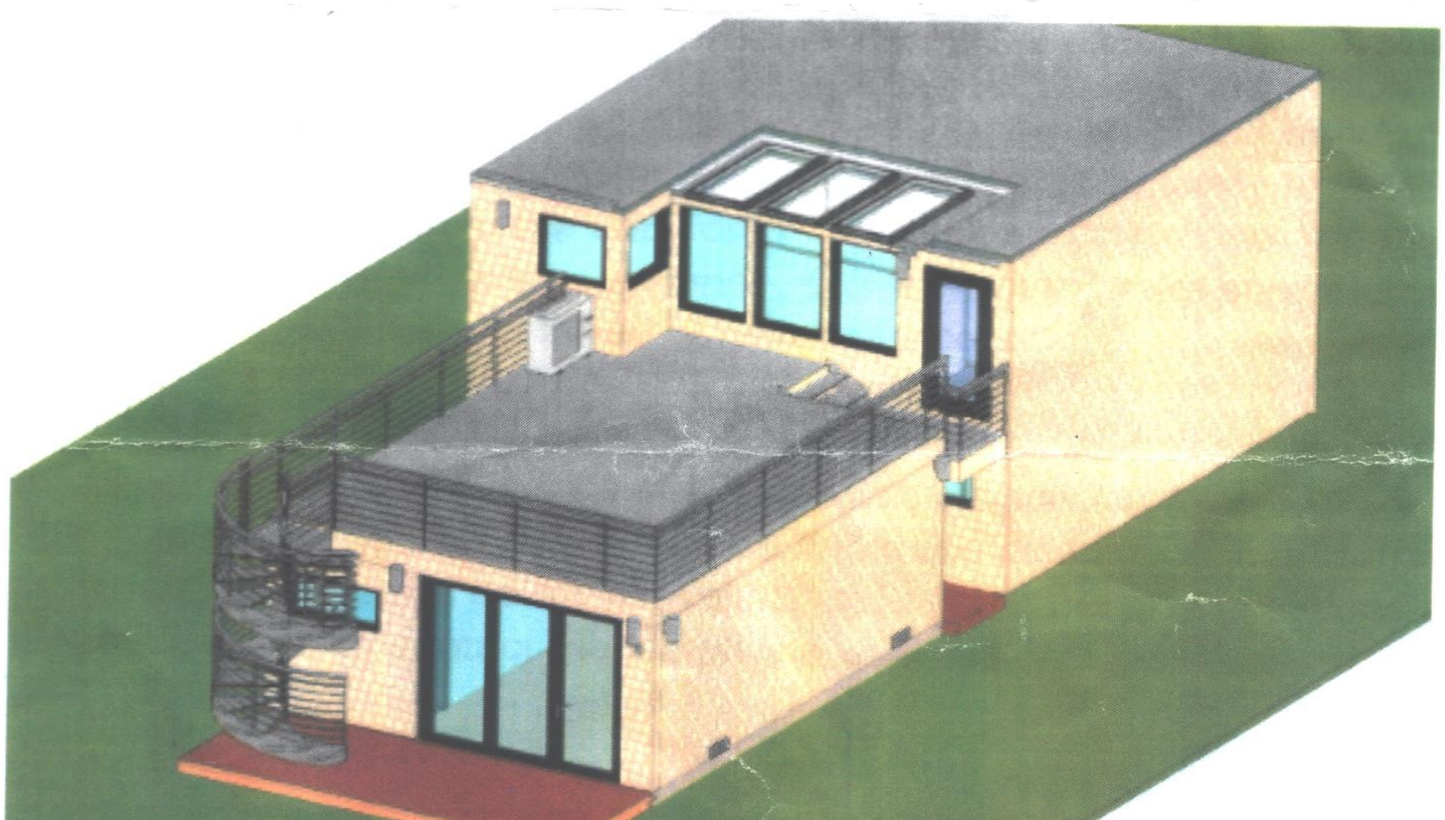

Goals of this Meeting

“We understand that the privacy of your home is of the utmost importance..”

“Voice your concerns in regards to the addition of” a “deck and spiral staircase.”

Exhibit CPGM

Contractors proposed goals to 765 for October 2023 project meeting

Concerns

Total elimination of privacy throughout rear of property

Increase noise through walls and from close proximity of proposed deck use

Further reduce light falling on existing windows

Exhibit OC-Owners(765) concerns to contractor October 2023

No Privacy Fence Option—Already at 6 feet

Exhibit PFO

Privacy fence option

Due to Privacy, Noise and Light Concerns, I Oppose this Deck and Stair Plan

Exhibit VO
Voiced opposition to contractor
For October 2023 Meeting

Proposed addition: Standing Deck with Spiral Stairs

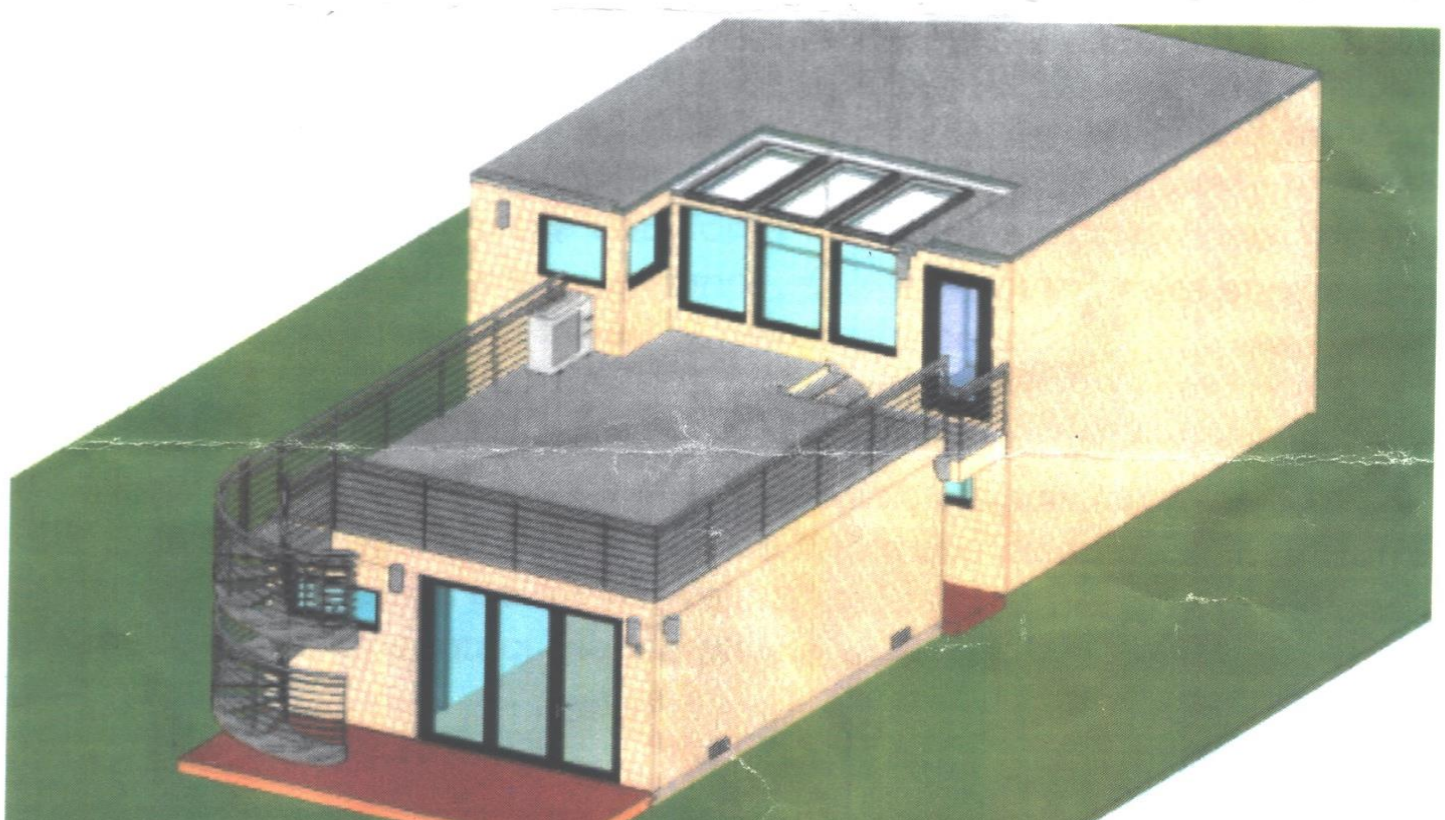

BRIEF SUBMITTED BY THE PERMIT HOLDER(S)

763 LAKEVIEW AVE - PERMIT NUMBER 2023/08/25/5349
Respondents Brief

Opening Statement:

Permit Number **2023/08/25/5349** has been reviewed and approved by every department in San Francisco. We have gone through each review process for a residential rooftop deck and complied with every city code to get this rooftop deck approved, issued, and built.

We hope to come to a fair conclusion with the city and neighbor (Peter) where both parties are happy with the result.

Our Situation:

Our names are Claudia and Carlos, and we are a family of 4 with two young children, ages 2 and 5. We recently built an ADU for Claudia's father after her mother died and he had a stroke last year. The deck we want to build is an attempt to recoup the outdoor space we lost when we built the ADU. Of course we knew building the ADU would take up our backyard space, but since we have the opportunity, we want to have more outdoor space for our kids to play and more space for when we host our family for get-togethers and holidays. The rooftop deck complies with all city code requirements and allows us to gain back usable space.

We have lived in this house for just over 10 years and want to update the space to accommodate our growing family. One of our kids just started kindergarten nearby at an SFUSD school and our youngest will follow in a few years. We're invested in this

community and see our home not only as a place where our kids were born, but where they will grow up.

Property Yard space before ADU:

Yard Space After ADU:

Willingness to Compromise:

We understand that adding a rooftop deck can be uncomfortable and pose concerns for adjacent neighbors. Whether it's privacy, noise, light, intensity of use, etc. We want to make it clear that we are more than open to help alleviate these concerns.

The text Claudia sent to Peter, referenced in his brief and seen below, was meant to be an olive branch, as we know he contested the deck. And as far as we know we weren't required to inform him that the plans to build were approved and going to proceed. We wanted to see if we could come to an agreement about how to address noise and privacy concerns.The intent was not to change the project plans as the plans were approved by the city and are not violating any codes. Unfortunately, he never responded and the only indication we've had that Peter received the text was reading it as he referenced it in his appeal brief. That being said, we are still open to making accommodations to address his concerns that don't involve building an alternative deck.

Unanswered Text Sent to Peter:

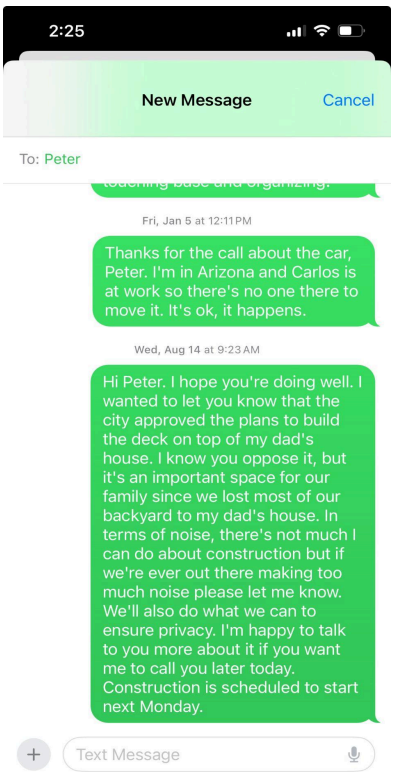

Privacy:

We are more than willing to provide privacy screening between Peter's house and the rooftop deck. We will work with the design team at AKD to get professional suggestions on the type of screening to still allow natural light to come through. This would actually increase privacy for our family, as our current backyard area is fully visible from Peter's own second story deck.

Noise:

While we understand the concern of noise, we are a family of 4 with two young children, there is no plan to use the Rooftop Deck as a "party deck." When we have our family gatherings mentioned in Peter's brief, it consists of the 5 people who live here, my sister and her partner, and sometimes my adult nephew. We don't play music and we are typically inside by 6 pm. We will continue to be outside with our family and have gatherings regardless of whether or not we are allowed to build the deck. If we are ever being too loud, Peter is welcome to text us to let us know and we will quiet down.

As mentioned above, we are also open to providing privacy screening between our rooftop deck and Peter's house to help reduce any noise.

Light:

The approved rooftop deck on top of the ADU will not increase in height. The images/renders below will show the Height of the approved ADU and the height of the

approved rooftop deck. There will be no more light lost due to the building of the approved rooftop deck.

Approved ADU Height: 9’10”

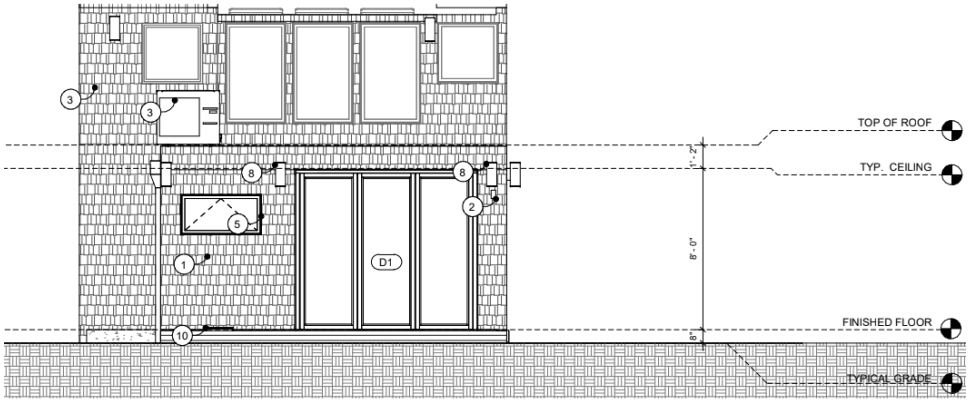

Approved Rooftop Deck Height: 9’10”

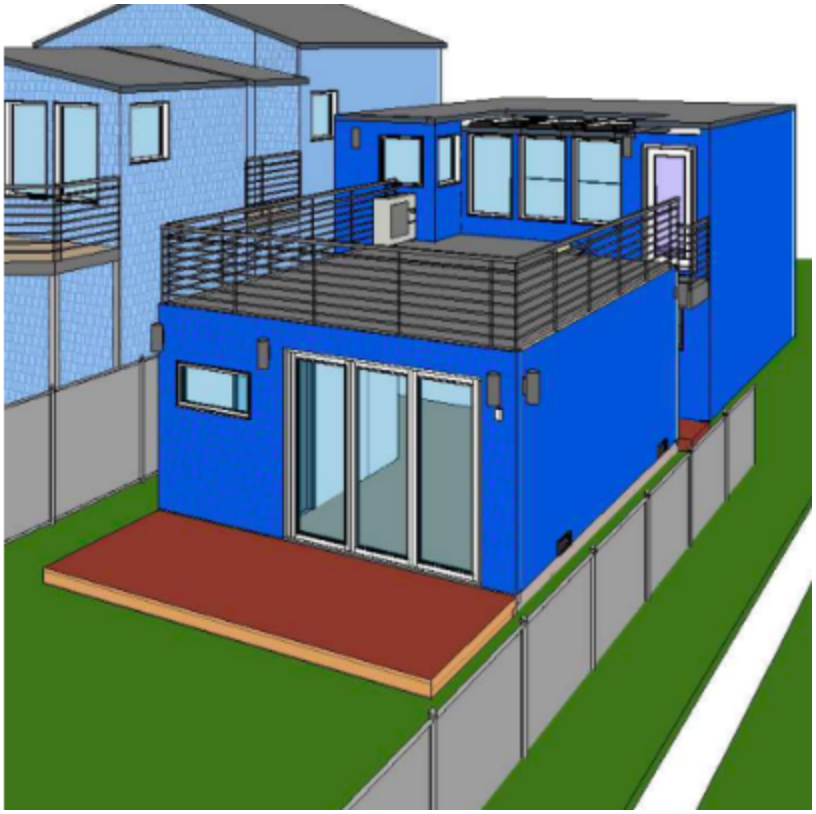

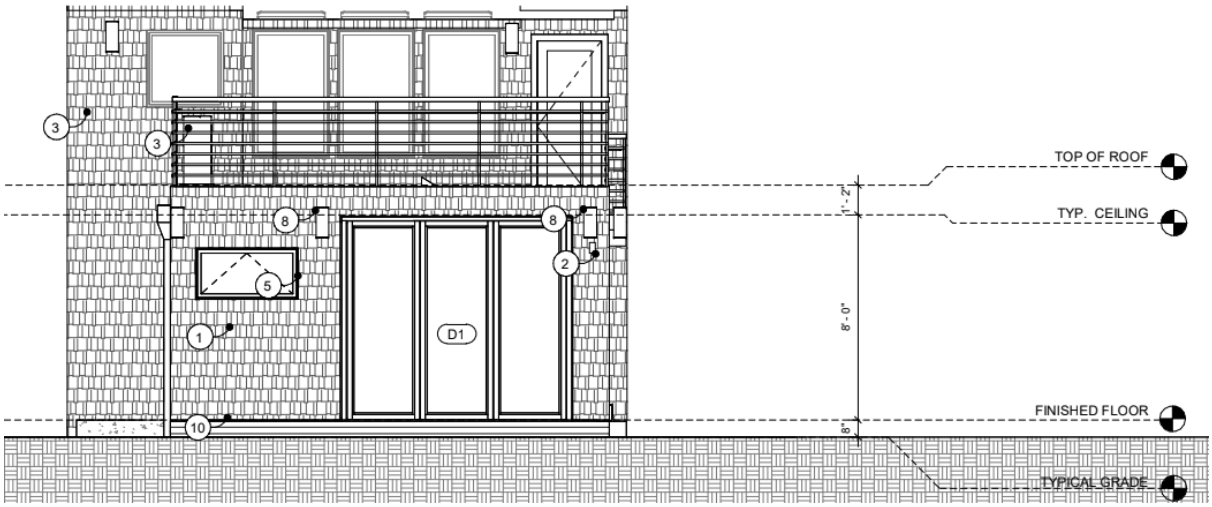

Intensity of Use:

The overall use for the approved rooftop deck is to allow our kids and family to enjoy the outdoors in the comfort of our property. While we will continue to be outside and host family gatherings regardless of whether or not the rooftop deck is built, the space we currently have is small, and will feel even smaller as our kids get bigger.

Conclusion:

As the permit holder we are requesting that the board uphold the project/entitlement as is, with no new conditions. All city departments approved our rooftop deck as it satisfies all codes and requirements the City San Francisco has in place. One neighbor should not prevent our family from building a rooftop deck to increase outdoor space for our children and family, especially as we are open to compromise to alleviate their concerns.

Sample Renders of Privacy and noise screenings:

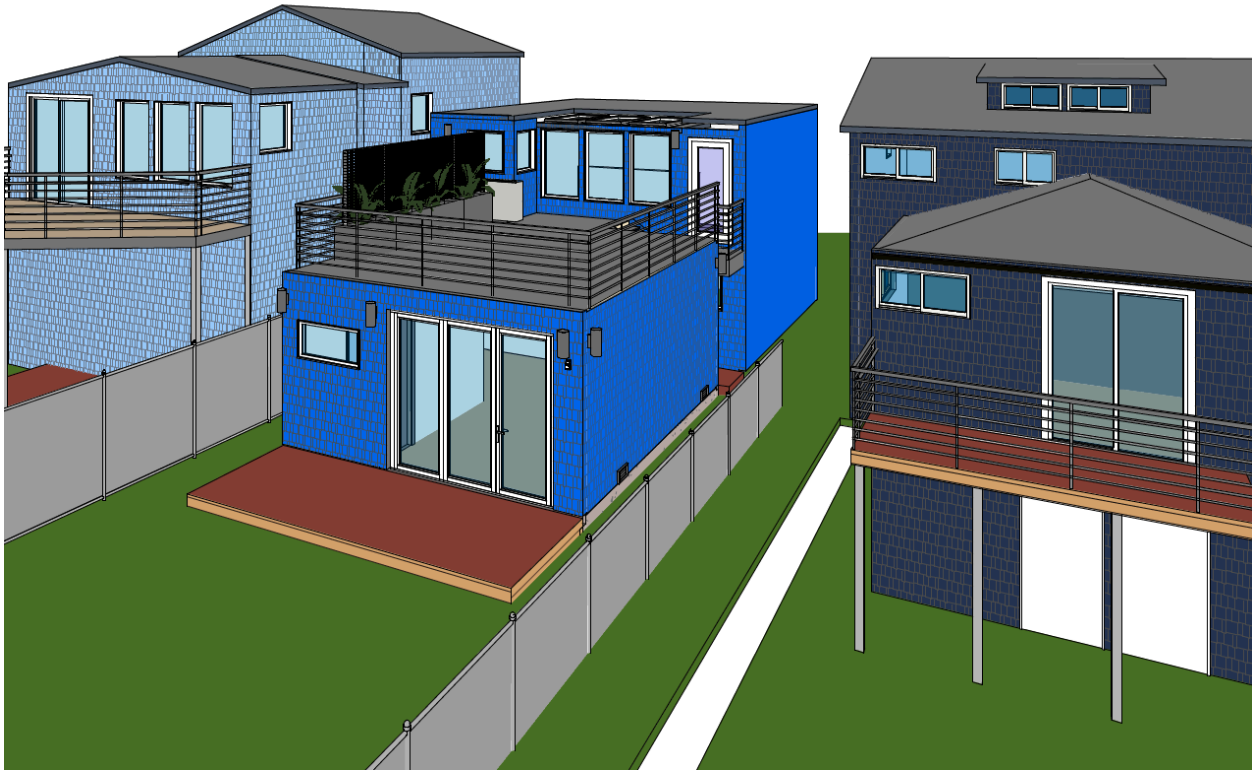

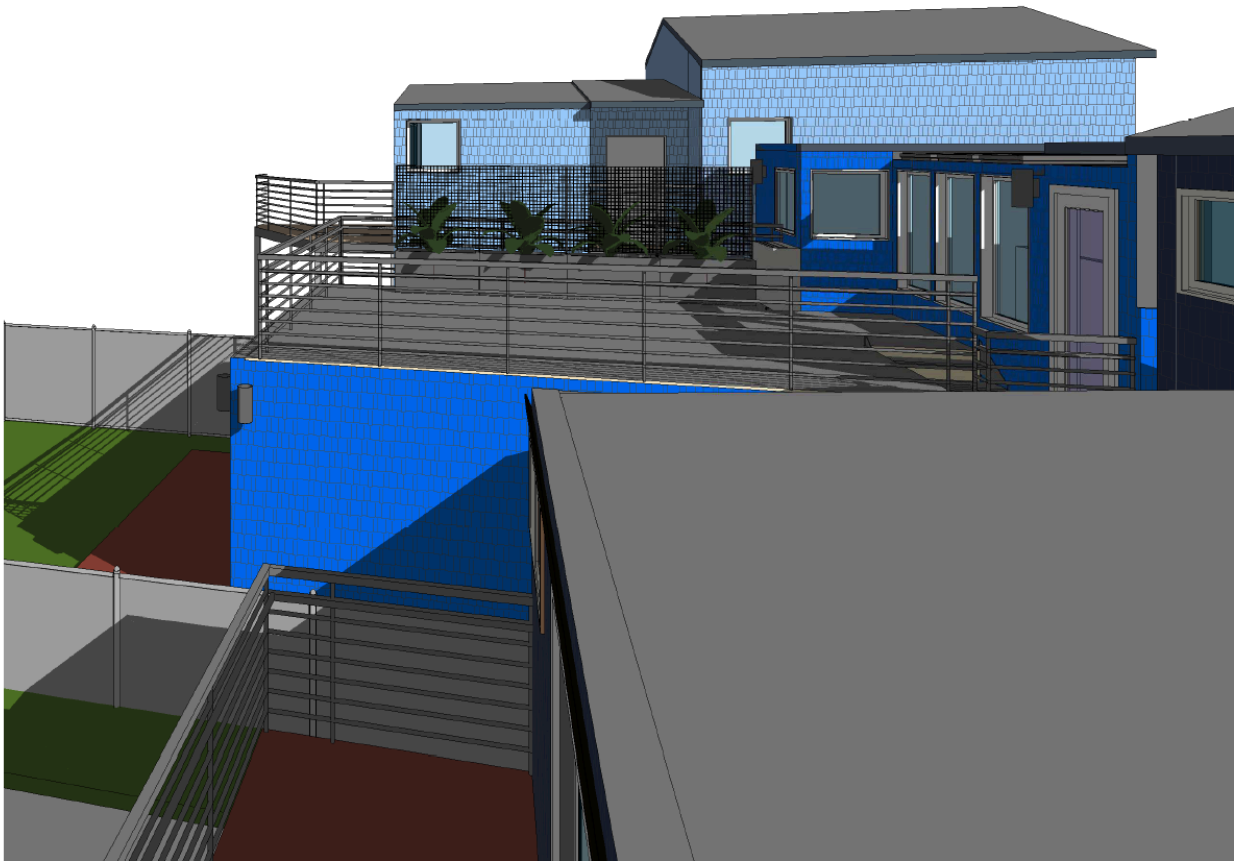

Trellis with planting example:

End of brief.

Thank you

PROJECT INFORMATION: APN 7054 051

PROJECT ADDRESS: 763 Lakeview Ave, San Francisco, CA 94112

BUILDING ZONING:	R1-8
BUILDING OCCUPANCY GROUP:	R-3/U
TYPE OF CONSTRUCTION:	VB
YEAR BUILT:	1904
NUMBER OF (E) DWELLING UNITS:	1
NUMBER OF (N) DWELLING UNITS:	2
STORIES :	2
COVERED PARKING SPACES:	1
UNCOVERED PARKING SPACES:	1
LOT SIZE:	2,495 Sq. Ft.

FLOOR AREA BREAKDOWN

EXISTING FLOOR AREA	1,350 SQ. FT.
TOTAL EXISTING FLOOR AREA =	1,350 SQ.FT.
ADU	374 SQ.FT
TOTAL PROPOSED FLOOR AREA=	**1,724 < 2,495 = OK**

SCOPE OF WORK:
A) ROOF TOP DECK

APPLICABLE CODES:
1. ALL WORK DESCRIBED HEREIN SHALL COMPLY WITH THE LATEST BUILDING CONSTRUCTION CODES AS ADOPTED OR AMENDED BY THE STATE OF CALIFORNIA AND THE CITY OF SAN FRANCISCO

CALIFORNIA BUILDING CODE 2019
CALIFORNIA MECHANICAL CODE 2019
CALIFORNIA PLUMBING CODE 2019
CALIFORNIA ELECTRICAL CODE 2019
TITLE 24 ENERGY REGULATIONS 2019
CALIFORNIA FIRE CODE 2019 (CFC)
CALIFORNIA GREEN BUILDING STANDARDS CODE 2019 (CGC)

2 PROJECT INFORMATION
-

PROJECT OWNER:

PROJECT DESIGNER: AKD Homes - Architectural Drawings By: Janelle Vargas

3518 Arden Rd
Hayward, CA 94545
design@akdhomes.net
510-314-0564
www.akdhomes.com

STRUCTURAL ENGINEER: FMD ENGINEERING, INC.
32106 ALVERADO BLDG. #340
UNION CITY, CA 94587
510-475-8290
FDUARTE@FMDENGR.COM

T-24: QUEST ENERGY DESIGN
1700 N. 1ST ST.
SAN JOSE, CA 95112
408-896-6018

1 PROJECT DIRECTORY
-

SHEET INDEX

#	SHEET #	SHEET NAME
0	A-0.0	COVER SHEET
1	A-0.1	NOTES
2	A-0.2	NOTES
3	A-0.3	BPM
4	A-0.4	M-03 Energy Inspection Checklist
5	A-0.5	ADJACENT BUILDINGS
6	A-1.0	PROPOSED FLOOR PLAN
7	A-2.0	PROPOSED ROOF PLAN
8	A-3.0	PROPOSED ELEVATIONS
9	A-4.0	BUILDING SECTIONS
10	A-5.0	PROPOSED ELECTRICAL PLAN
11	A-6.0	DOOR & WINDOW SCHEDULE
12	A-7.0	DETAILS
13	A-8.0	SPECIFICATIONS
14	A-8.1	SPECIFICATIONS
15	A-8.2	SPECIFICATIONS
16	A-8.3	SPECIFICATIONS
17	A-8.4	APPLIANCE SPECS
18	STD1	STRUCTURAL SHEET
19	STD2	STRUCTURAL SHEET
20	STD3	STRUCTURAL SHEET
21	S1	STRUCTURAL SHEET
22	S2	STRUCTURAL SHEET
23	T-1	T-1
24	T-2	T-2

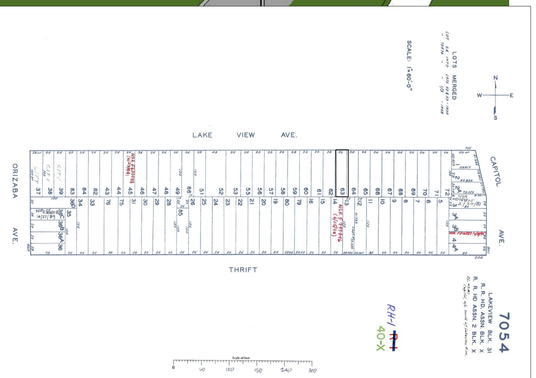

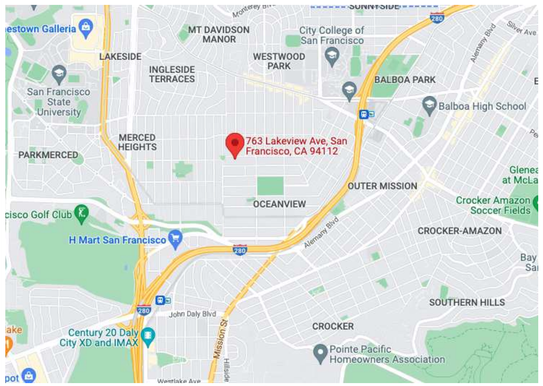

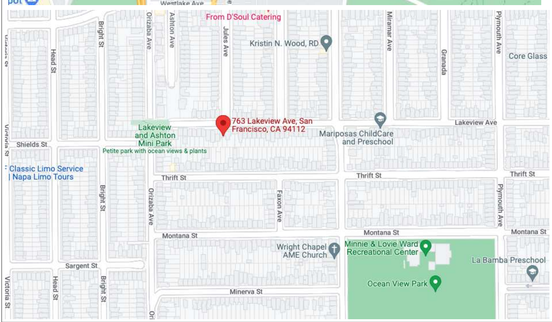

3 PARCEL AND VICINITY MAPS
NOT TO SCALE

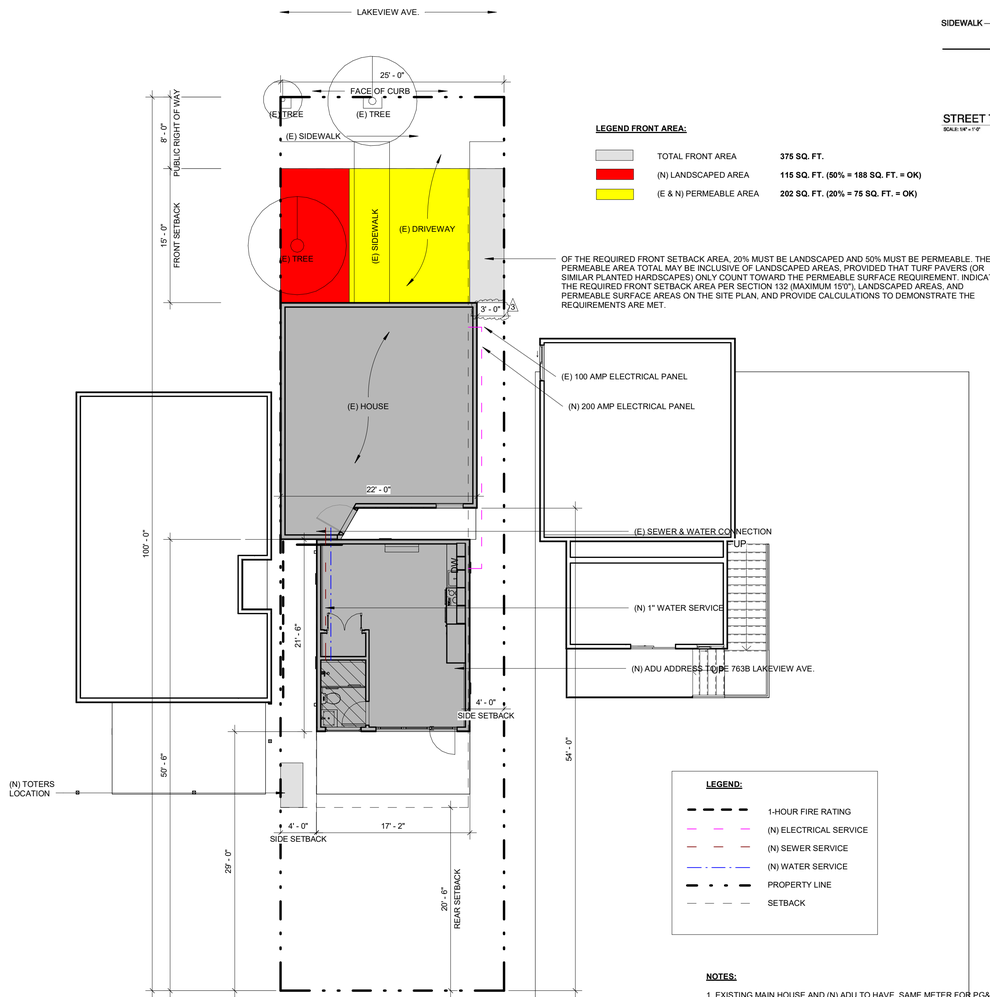

4 PROPOSED SITE PLAN
1/8" = 1'-0"

LEGEND:

- 1-HOUR FIRE RATING
- (N) ELECTRICAL SERVICE
- (N) SEWER SERVICE
- (N) WATER SERVICE
- PROPERTY LINE
- SETBACK

LEGEND FRONT AREA:

TOTAL FRONT AREA	375 SQ. FT.
(N) LANDSCAPED AREA	115 SQ. FT. (50% = 188 SQ. FT. = OK)
(E & N) PERMEABLE AREA	202 SQ. FT. (20% = 75 SQ. FT. = OK)

OF THE REQUIRED FRONT SETBACK AREA, 20% MUST BE LANDSCAPED AND 50% MUST BE PERMEABLE. THE PERMEABLE AREA TOTAL MAY BE INCLUSIVE OF LANDSCAPED AREAS, PROVIDED THAT TURF PAVERS (OR SIMILAR PLANTED HARDSCAPES) ONLY COUNT TOWARD THE PERMEABLE SURFACE REQUIREMENT. INDICATE THE REQUIRED FRONT SETBACK AREA PER SECTION 132 (MAXIMUM 15'0"), LANDSCAPED AREAS, AND PERMEABLE SURFACE AREAS ON THE SITE PLAN, AND PROVIDE CALCULATIONS TO DEMONSTRATE THE REQUIREMENTS ARE MET.

NOTES:

1. EXISTING MAIN HOUSE AND (N) ADU TO HAVE SAME METER FOR PG&E AND WATER
2. MAIN HOUSE DOES NOT HAVE FIRE SPRINKLERS - NO PROPOSED FIRE SPRINKLERS IN ADU
3. PROPOSED BUILDING IS AN ALL-ELECTRIC-BUILDING
4. **30' REAR YARD SETBACK TO BE MET, WILL PUSH ROOF DECK BACK 12"**

PLAN REVISION
202308255349-REV4
DEPARTMENT OF BUILDING INSPECTION
THIS PLAN MEETS THE QUALITY STANDARD FOR IMAGING.
ACCEPTED BY _____

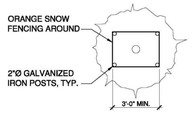

PLAN VIEW

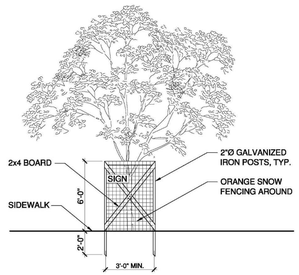

STREET TREE PROTECTIVE FENCE
SCALE: 1/4" = 1'-0"

CITY AND COUNTY OF SAN FRANCISCO
Chu Liu - DBI BLDG STR
DEPARTMENT OF BUILDING INSPECTION
July 18, 2024

REVIEWED FOR FIRE ACCESS ONLY

IF SPRINKLERS ARE REQUIRED PROVIDE WATER FLOW INFORMATION ON PLANS

CITY AND COUNTY OF SAN FRANCISCO
Jason.Woo
FIRE
July 16, 2024

CITY AND COUNTY OF SAN FRANCISCO
Kurt Botn - PLN
PLANNING
July 11, 2024

CITY AND COUNTY OF SAN FRANCISCO
Susan Nakatsu - PW BUF
PUBLIC WORKS
July 15, 2024

CITY AND COUNTY OF SAN FRANCISCO
DENNIS
PUBLIC WORKS
July 11,2024

RECEIVED
07/11/2024
DEPT. OF BUILDING INSPECTION
THIS PLAN MEETS THE QUALITY STANDARD FOR REPRODUCTION
ACCEPTED _____

NEW ATTACHED ADU STUDIO MODULE (763B LAKEVIEW AVE.)

763 LAKEVIEW AVE.
SAN FRANCISCO, CA 94112

AKD homes
ACCESSORY DWELLING UNITS
WWW.AKDHOMES.COM
EMAIL: DESIGN@AKDHOMES.NET
TEL: 510-314-0564

ISSUANCES

No.	Description	Date
1	PLANNING	5.16.22
2	ROOFTOP REVISION #2	2.21.2024
3	ROOFTOP REVISION 2	6.5.2024

Designed By: Janelle Vargas

email: jburnett@disenodesign.net phone: 620-655-8299

COVER SHEET

APPROVED
Dept. of Building Insp.
-San Francisco-
08/06/2024

Drawing Scale: As indicated

Job No. PLANS

A-0.0

763-A LAKEVIEW AVENUE: PA# 2023-08-25-5349-REV4

GENERAL NOTES:

1. ALL WORK DESCRIBED HEREIN SHALL COMPLY WITH THE LATEST BUILDING CONSTRUCTION CODES AS ADOPTED OR AMENDED BY THE STATE OF CALIFORNIA AND THE CITY OF SAN FRANCISCO - 2019 CRC, CBC, CMC, CPC, CEC AND 2019 ENERGY REGULATIONS
2. EXISTING CONDITIONS SHALL BE FIELD VERIFIED BY THE CONTRACTOR FOR COMPATIBILITY WITH THE NEW CONSTRUCTION SHOWN HEREIN
3. ALL NOTES AND DIMENSIONS SHALL BE FIELD VERIFIED BY THE GENERAL CONTRACTOR PRIOR TO CONSTRUCTION
4. DRAWINGS ARE NOT TO BE SCALED FOR DIMENSIONS. WRITTEN DIMENSIONS SHALL BE PREFERRED
5. IN CASE OF DISCREPANCIES BETWEEN THE DRAWINGS AND THE FIELD CONDITIONS, THE DESIGNER SHALL BE NOTIFIED PRIOR TO PROCEEDING WITH CONSTRUCTION
6. THE GENERAL CONTRACTOR / OWNER SHALL BE RESPONSIBLE FOR ALL WORK REQUIRED TO COMPLETE THE CONSTRUCTION OF THE PROJECT
7. WORKMANSHIP AND MATERIALS SHALL CONFORM WITH THE CURRENT UNIFORM BUILDING CODE

SITE NOTES:

1. EXISTING GRADE ELEVATION SHALL BE MAINTAINED
2. PROVIDE A 2% MIN SLOPE AWAY FROM BUILDING AT ALL LANDINGS
3. ALL NEW SEWER LINES TO HAVE ATMOSPHERIC AND LISTED ACCESSIBLE BACKFLOW PREVENTION WATER VALVES INSTALLED, AND SHALL HAVE AN ATMOSPHERIC RELIEF VALVE INSTALLED UPSTREAM OF THE BACKFLOW VALVE AND A CLEANOUT DOWNSTREAM OF THE BACKFLOW VALVE OUTSIDE THE BUILDING IN CLOSE PROXIMITY TO THE FOUNDATION.
4. STATE ARCHITECT CERTIFIED EARTHQUAKE - ACTUATED GAS SHUT OFF VALVES AT ALL NEW GAS UTILITY METERS

CONSTRUCTION NOTES

1. ALL DIMENSIONS ARE TO FINISHED FACE OF WALLS, FLOORS AND CEILINGS; UNLESS OTHERWISE NOTED
2. BEDROOMS THAT DO NOT HAVE EGRESS DOORS, SHALL HAVE ONE WINDOW THAT MEETS EGRESS REQUIREMENTS:
   - A. MIN. 20" CLEAR WIDTH, MIN. 24" CLEAR HEIGHT WHEN OPEN;
   - B. MIN. 5.7 SQ. FT. OF CLEAR OPEN AREA / 5 SQ. FT. FOR GRADE LEVEL ROOMS
   - C. MAX. HEIGHT OF 44" FROM FINISHED FLOOR TO BOTTOM OF CLEAR OPENING
3. GLAZING INSTALLED SHALL BE TEMPERED WHEN INSTALLED IN THE FOLLOWING LOCATIONS:
   - A. ADJACENT TO AND WITHIN 24" OF A DOOR
   - B. SHOWER/TUB ENCLOSURES WHERE THE BOTTOM EXPOSED EDGE OF THE GLAZING IS < 60" ABOVE THE FINISHED FLOOR
   - C. GLAZING IN A WALL ENCLOSING A STAIRWAY LANDING OR WITHIN 5' OF THE BOTTOM AND TOP OF THE STAIRWAY, WHERE THE BOTTOM EDGE OF THE GLAZING IS <60" ABOVE THE FLOOR
   - D. FINISHED FLOOR ANY GLAZING MEETING ALL THE FOLLOWING CONDITIONS:
     - a. EXPOSED AREA OF AN INDIVIDUAL PANE IS > 9 SQ. FT.
     - b. EXPOSED BOTTOM EDGE IS < 18" ABOVE FINISHED FLOOR
     - c. EXPOSED TOP EDGE IS >36" ABOVE FINISHED FLOOR
     - d. WITH IN A 36" HORIZONTAL DISTANCE OF A WALKING SURFACE
4. NEW 110V SMOKE DETECTORS WITH BATTERY BACKUP, WHICH ARE AUDIBLE IN ALL SLEEPING AREAS SHALL BE INSTALLED IN THE FOLLOWING LOCATION- BEDROOMS, HALLWAYS LEADING TO BEDROOMS, ABOVE TOPS OF STAIRS, ANY AREA WHERE CEILING HEIGHT IS OVER 24" ABOVE A HALLWAY CEILING LEADING TO BEDROOMS AND MIN. ONE ON EVERY LEVEL
5. CARBON MONOXIDE DETECTORS SHALL BE INSTALLED AS PER CODE REQUIREMENTS
6. NEW TOILETS SHALL BE 1.28 GALLON PER FLUSH
7. NEW TOILETS SHALL KEEP THE FOLLOWING CLEARANCE: MIN 15" CLEAR FROM CENTER OF TOILET TO ADJACENT WALL OR ANY OTHER BUILT OBSTACLE. 24" CLEARANCE SHALL BE KEPT IN FRONT OF THE TOILET
8. PROVIDE MIN. 22"X30" ATTIC ACCESS, SEE PLAN FOR LOCATION. ATTIC ACCESS TO HAVE A PULL DOWN CEILING PANEL WITH FOLDING LADDER. UNIT SHALL BE SELF CONTAINED WITH ITS OWN FRAME AND REQUIRE NO HEADROOM OR ATTIC CLEARANCE. WHERE OCCURS
9. PROVIDE 18"X24" CRAWL SPACE ACCESS. CRC SEC. R408.4 , WHERE OCCURS
10. PROVIDE 5/8" GYPSUM BOARD AT ALL COMMON WALLS AND 5/8" GYPSUM BOARD TYPE 'X' AT CEILINGS BETWEEN GARAGE AND RESIDENCE. PROVIDE 1/2" GYPSUM BOARD AT ALL STRUCTURE SUPPORTING FLOOR AND CEILING ASSEMBLIES USED FOR SEPARATION BETWEEN GARAGE AND DWELLING. CRC SEC. R302.6; CRC SEC R501.3 AND CBC 717.1 AND 717.2. GARAGE FIRE RATED WALL ASSEMBLY TO EXTEND TO ROOF SHEATHING SEAL JOINTS WITH FIRE TAPE. 2019 CRC SEC. R302.6
11. DOOR SEPARATING THE GARAGE AND THE LIVING SPACE SHALL HAVE A 20 MINUTE FIRE PROTECTION RATING BE SELF CLOSING AND LATCHING ,TIGHT FITTING SOLID, WOOD DOOR 1-3/8" THICKNESS ('FIRE DOOR') SEE CRC SEC. R302.5.1
12. PROVIDE A MINIMUM 36" DEEP LANDING OUTSIDE ALL EXTERIOR DOORS. THE TOP OF THE EXTERIOR LANDING SHALL NOT BE MORE THAN 7 3/4" LOWER THAN THE EXTERIOR LANDING FOR IN-SWINGING DOORS, AND NOT MORE THAN 1 1/2" LOWER FOR OUT SWINGING DOORS CRC SEC. 311.3.1
13. GUARDRAILS SHALL BE 42" HIGH ABOVE FINISHED FLOOR. GUARDRAIL CONNECTION SHALL BE CAPABLE OF RESISTING A CONCENTRATED LOAD OF 200 POUNDS APPLIED AT ANY POINT ALONG THE TOP RAILING AND 25 PSF HORIZONTAL LOAD PERPENDICULAR TO THE BALUSTERS.
14. WATER HEATERS SHALL BE MOUNTED ON A PLATFORM OR WALL MINIMUM 18" ABOVE FINISHED FLOOR, MEASURED TO THE FLAME.
15. TYPICAL INSULATION:(A.) R-30 FOR ATTIC / CEILING/ ROOF; (B.)R-15 FOR EXTERIOR WALLS;(C.) R-19 FOR FLOORS OVER UNHEATED SPACES; (D.) R-8 FOR HEATING AND COOLING DUCTS
16. STRUCTURAL WELDING: STRUCTURAL WELDING WILL BE COMPLETED AND INSPECTED IN AN APPROVED FABRICATION SHOP.
17. UNDER FLOOR DUCTS, IF ANY, SHALL HAVE CLEARANCES TO EARTH AND NOT PASS THROUGH MINIMUM REQUIRED CRAWL SPACE ACCESS POINTS
18. FINISHED ROOFING MATERIAL SHALL BE INSTALLED AND COMPLETED PRIOR TO FRAME INSPECTION
19. Fireblocking shall be provided to cut off all concealed draft openings (both vertical and horizontal) in the following locations as per 2019 CRC R302.11:
   - A. In concealed spaces of stud walls and partitions, including furred spaces and parallel rows of studs or staggered studs, as follows:
   - B. Vertically at the ceiling and floor levels.
   - C. Horizontally at intervals not exceeding 10 feet (3048 mm).
   - D. At all interconnections between concealed vertical and horizontal spaces such as occur at soffits, drop ceilings and cove ceilings.
   - E. At openings around vents, pipes, ducts, cables and wires at ceiling and floor level, with an approved material to resist the free passage of flame and products of combustion. The material filling this annular space shall not be required to meet the ASTM E 136 requirements.

FIRE DEPARTMENT NOTES:

1. SMOKE DETECTORS AND CARBON MONOXIDE DETECTORS SHALL BE INNER CONNECTED
2. SMOKE DETECTORS SHALL BE DUAL SENSORS - IONAZATION/PHOTO ELECTRIC. IF SMOKE DETECTOR IS LOCATED WITHIN 20 FEET OF KITCHEN OR FIREPLACE, PHOTO ELECTRIC SMOKE DETECTOR SHALL BE INSTALLED
3. A DUAL SENSOR SMOKE ALARM SHALL BE INSTALLED IN EVERY ROOM. A DUAL SENSOR SMOKE ALARM SHALL BE INSTALLED OUTSIDE SLEEPING AREAS.
4. A CARBON MONOXIDE DETECTOR SHALL BE INSTALLED OUTSIDE SLEEPING AREAS.
5. PREMISE IDENTIFICATION: BUILDING ADDRESS NUMBERS SHALL BE LOCATED ON FRONT / STREE FACING EXTERIOR WALL. NUMBERS SHALL BE METAL, CONTRASTING AGAINST HOUSE COLOR AND SHALL BE MINIMUM 4" HIGH WITH A MIN. STROKE WIDTH OF .5" CFC SECTION 505.1

2019 CAL GREEN NOTES:

1. SITE AND CONSTRUCTION MANAGMEN REQUIREMENTS:
   - A. 4.106.1 In order to manage storm water drainage during construction, one or more of the following shall be implemented:
     - a. Retention basins of sufficient size shall be utilitzed to retain storm water on the site.
     - b. Where storm water is conveyed to a public drainage system, collection point, gutter or similar disposal method, water shall be filtered by use of a barrier system, wattle or other method approved by the enforcing agency.
     - c. Compliance with a lawfully enacted storm water management ordinance.
   - B. A4.106.2.3 Topsoil shall be protected or saved for reuse as specified in this section. The construction area shall be identified and delineated by fencing or flagging to limit construction activity to the construction area. Heavy equipment or vehicle traffic and material storage outside the construction area shall be limited to the areas that are planned to be paved.
   - C. 4.106.3Construction plans shall indicate how the site grading or drainage system will manage all surface water flows to keep water from entering buildings. Examples are: swales, water collection and disposal systems, french drains, water retention gardens, other water measures which keep surface water away from buildings and aid in groundwater recharge.
   - D. A4.103.1 A site which complies with at least one of the following characteristics is selected: 1. An infill site is selected. 2. A greyfield site is selected. 3. An EPA-recognized and remidiated site is selected.
   - E. A4.105.3 Prior to the house being demolished, a deconstruction survey shall be prepared that includes a list of all materials that are reusable.
   - F. A4.106.4 Not less than 30% of the total parking, walking or patio surfaces shall be permeable.
   - G. A4.106.5 Roof with slope ≥ 2 shall have an SRI of 20 or greater. Roof with slope <2 shall have an SRI of 78 or greater.
   - H. A4.106.8.2 a) The property owner shall provide Conduit Only, EVSE-Ready Outlet, or EVSE Installed for each residence. (b) Location. The proposed location of a charging station may be internal or external to the dwelling, and shall be in close proximity to an on-site parking space consistent with City guidelines, rules, and regulations.
   - I. A4.108.8.3 Provide at least one EVSE-ready outlet or charger for each residential unit in the structure. For guest parking provide conduit only, EVSE-ready outlet, or EVSE installed for at least 25% of guest parking spaces, of which at least 5% (no less than one) shall be EVSE installed. If multi-family residential structures have individual attached parking then property owner shall provide conduit only, EVSE-ready outlet, or EVSE installed in a parking space attached to the residence or a shared electrical panel between the residence and parking space.
   - J. A4.103.2 Community connectivity. Facilitate community connectivity by one of the following methods: 1. Locate project within a 1/4-mile true walking distance of at least four basic services, readily accessible by pedestrians. 2. Locate project within a 1/2-mile true walking distance of at least seven basic services, readily accessible by pedestrians. 3. Other methods increasing access to additional resources. Note: Examples of services include bank, place of worship, grocery, day care, cleaners, fire station, barber shop, beauty shop, hardware store, laundry, medical clinic, dental clinic, senior care, park, pharmacy, post office, restaurant, school, theater, community center fitness center, museum, farmers market.
   - K. A4.103.1 A site which complies with at least one of the following characteristics is selected: 1. An infill site is selected. 2. A greyfield site is selected. 3. An EPA-recognized and remidiated site is selected.
   - L. A4.104.1 Prior to the beginning of construction, the builder shall receive a written guideline and instruction specifying the green goals of the project.
2. LANDSCAPE REQUIREMENT:
   - A. A4.106.3 Post-construction landscape design shall accomplish one or more of the following: 1) Areas disrupted during construction are restored to be consistent with native vegetation species and patterns. 2) Limit turf areas to no more than 10% of total landscaped area. 3) Utilize at least 75% native CA or drought tolerant plant and tree species appropriate for the climate zone region. 4) Hydrozone irrigation techniques are incorporated into the landscape design.
   - B. A4.304.3 When landscaping is provided by the builder, a water budget shall be developed for landscape irrigation use that conforms to the local water efficient landscape ordinance or to the CA Department of Water Resources Model Water Efficient Landscape Ordinance where no local ordinance is applicable.
   - C. A4.304.4 When landscape is provided by the builder, a water efficient landscape irrigation system shall be installed that reduces potable water use. The potable water use reduction shall be calculated beyond the initial requirements for plant installation and establishment. Calculations for the reduction shall be based on the water budget developed pursuant to Section A4.304.3. Landscape does not exceed 60% ETo times the landscape area. Methods used to comply may include but are not limited to: plant coefficient, irrigation efficiency, captured rainwater, recycled water, graywater.
   - D. A4.304.6 For new water service connections, landscaped irrigated areas more than 1,000 sq ft shall be provided with separate submeters for outdoor potable water use.
   - E. A4.305.5 Newly constructed residential buildings with a landscape of any size shall install a three-way diverter valve in the drain-line of all laundry fixtures to assist in the future installation of a "Laundry-to-Landscape" irrigation system.
   - F. A4.106.10 Outdoor lighting systems comly with all of the following: 1) The minimum requirements in the CA Energy Code for Lighting Zone 1-4. 2) BUG ratings as defined in IES TM-15-11. 3) Allowable BUG ratings are not exdceeding those shown in Table A4.106.10 or comply with a local ordinance pursuant to Section 101.7 of this code, whichever is more stringent.
3. IRRIGATION: All irrigation system controllers for landscaping shall comply with the following (Calgreen Section 4.304.1):
   - A. Controllers shall be weather or soils moisture-based controllers that automatically adjust irrigation in response to changes in plants' needs as weather conditions change.
   - B. Weather-based controllers without integral rain sensors or communication systems that account for local rainfall, shall have a separate wired or wireless rain sensor which connects or communicates with the controller(s). Soil moisture-based controllers are not required to have rain sensor input.
   - C. A4.304.1 Spray irrigation limited to lawns only. No lawns on slopes >10%. No overhead sprinklers installed where lawn is <8' wide. Low-volume irrigation systems are: drip, bubbler, drip emitters, soaker hose, and stream-rotator spray heads.
4. All annular spaces around pipes, electric cables, conduits or other openings in plates at exterior walls shall be protected against the passage of rodents by closing such openings with cement mortar, concrete masonry or a similar method acceptable to the enforcing agency per Calgreen Section 4.406.1.
5. Contractor shall provide a copy of the operation and maintenance manual to the building occupant or owner addressing the following items (1 through 10 in Calgreen Section 4.410.1.) also, a copy of the Operation and maintenance manual shall be placed at the building at final inspection:
   - A. Directions to the owner or occupant that the manual shall remain with the building throughout the life cycle of the structure.
   - B. Operation and maintenance instructions for the following:
     1. Equipment and appliances, including water-saving devices and systems, HVAC systems, water-heating systems and other major appliances and equipment.
     2. Roof and yard drainage, including gutters and downspouts.
     3. Space conditioning systems, including condensers and air filters.
     4. Landscape irrigation systems.
     5. Water reuse systems.
   - C. Information from local utility, water and waste recovery providers on methods to further reduce resource consumption, including recycle programs and locations.
   - D. Public transportation and/or carpool options available in the area.
   - E. Educational material on the positive impacts of an interior relative humidity between 30–60 percent and what methods an occupant may use to maintain the relative humidity level in that range.
   - F. Information about water-conserving landscape and irrigation design and controllers which conserve water.
   - G. Instructions for maintaining gutters and downspouts and the importance of diverting water at least 5 feet away from the foundation.
   - H. Information on required routine maintenance measures, including, but not limited to, caulking, painting, grading around the building, etc.
   - I. Information about state solar energy and incentive programs available.
   - J. A copy of all special inspection verifications required by the enforcing agency or this code.
6. Contractor shall install Pollutant Control as followed (Calgreen Section 4.504):
   - A. Cover duct openings and other related air distribution component openings during construction (Cal Green 4.504.1)
   - B. Aerosol paints and coatings shall be compliant with product weighted MIR limits for ROC and other toxic compounds (Cal Green 4.504.2.3) Verification of compliance shall be provided by contractor.
   - C. Carpet and carpet systems shall be compliant with VOC limits (Cal Green 4.504.3)
   - D. Minimum 80 % of floor area receiving resilient flooring shall comply with (Cal Green4.504.4)
7. Contractor shall install Interior Moisture Control as followed (Cal Green Section 4.505):
   - A. Install capillary break and vapor retarder at slab on grade foundations (2019 Cal Green 4.505.2). see structural drawings and details
   - B. contractor shall check moisture content of building materials used in wall and floor framing before enclosure and dand have results verified by inspector. (Cal Green sec. 4.505.3)
8. Contractor to verify each bathroom shall be mechanically vented, and controlled by humidity control; except for fans functioning as a component of a whole house ventilation system (Calgreen Section 4.506). for further information please refer to electrical plans sheets A-5.0; and specifications located on 1/A-8.2; 2/A-8.2

9. PLUMBING FIXTURES SHALL COMPLY WITH THE FOLLOWING:
   - A. 4.303.1.1 All toilets are 1.28 gpf or dual-flush.
   - B. 4.303.1.3.1 Showerheads have max flow rate of 1.8 gpm at 80 psi. Showerheads shall be certified to the performance criteria of the U.S.EPA WaterSense specs.
   - C. 4.303.1.2.3 When a shower is served by more than one showerhead, the combined flow rate of all showerheads and/or other shower outlets controlled by a single valve shall not exceed 1.8 gpm at 80 psi, or the shower shall be designed to allow only one shower outlet to be in operation at a time.
   - D. 4.303.1.4.2 Max flow rate for all lavy faucets is 1.2 gpm at 60 psi. Minimum flow rate shall not be less than 0.8 gpm at 20 psi.
   - E. 4.303.2 Plumbing fixtures shall comply with CA Plumbing Code.
   - F. **4.303.1.4.1 Residential lavatory faucets.** The maximum flow rate of residential lavatory faucets shall not exceed 1.2 gallons per minute at 60 psi. The minimum flow rate of residential lavatory faucets shall not be less than 0.8 gallons per minute at 20 psi.
   - G. **4.303.1.4.4 Kitchen faucets.** The maximum flow rate of kitchen faucets shall not exceed 1.8 gallons per minute at 60 psi. Kitchen faucets may temporarily increase the flow above the maximum rate, but not to exceed 2.2 gallons per minute at 60 psi, and must default to a maximum flow rate of 1.8 gallons per minute at 60 psi.
   - H. **4.303.2 Standards for plumbing fixtures and fittings**. Plumbing fixtures and fittings required in Section 4.303.1 shall be installed in accordance with the California Plumbing Code, and shall meet the applicable referenced standards.**Note:** Where complying faucets are unavailable, aerators or other means may be used to achieve reduction.
10. Environmental Comfort (Calgreen Section 4.507):
    - A. Contractor shall provide Insulated louvers/covers (min R-4.2) which close when the fan is off for the whole house exhaust fans (4.507.1).
    - B. Duct systems are sized, designed, and equipment is selected per Section 4.507.2.
    - C. HVAC system installers must be trained and certified and special inspectors employed by the enforcing agency must be qualified.
11. APPLIANCES: A4.303.3 Install at least one qualified Energy Star appliance: 1) Dishwasher no more than 4.25 gallons of water per cycle. 2) Clothes washer - water factor of 6 gallons of water per drum capacity or less.
12. WASTE MANAGEMENT:
    - A. 16.14/4.408.1 Nonhazardous construction and demolition debris generated at the site is diverted to recycle or salvage facilities. Eighty percent (80%) construction waste reduction is required for all residential projects.
    - B. 4.408.2 Everything done with Green Halo
    - C. 4.408.03 Utilize a waste management company, approved by the enforcing agency, which can provide verifiable documentation that the percentage of construction and demolition waste material diverted from the landfill complies with Section 4.408.1.
    - D. 4.410.1 Operation and Maintenance Manual shall be prepared.
    - E. A4.405.3 The Recycled Content Value shall not be less than 15% of the total material cost of the project.
    - F. A4.403.2 Tier 2 = 25%. Materials used to reduce cement are: fly ash, slag, silica fume, rice hull ash.
    - G. A4.405.3.1 The Recycled Content Value shall not be less than 15% of the total material cost of the project.
    - H. **4.408.1 Construction waste management.** Recycle and/or salvage for reuse a minimum of 65 percent of the nonhazardous construction and demolition waste in accordance with one of the following: 1. Comply with a more stringent local construction and demolition waste management ordinance; or 2. A construction waste management plan, per Section 4.408.2; or 3. A waste management company, per Section 4.408.3; or4.The waste stream reduction alternative, per Section 4.408.4.
13. FRAMING: A4.404.3 Use premanufactured building systems whenever possible. One or more of the following: 1) Composite floor joist or premanufactured floor framing system. 2) Composite roof rafters or premanufactured roof framing system. 3) Panelized framing - SIPs, ICF, etc.
14. FINISHES:
    - A. A4.405.1 Use prefinished building materials that do not require additional painting or staining when possible. Use one or more of the following: 1) Exterior trim not requiring paint or stain. 2) Windows not requiring paint or stain. 3) Siding or exterior wall coverings that do not require paint or stain.
    - B. A4.405.4 Use one or more of the following materials manufactured from rapidly renewable sources: 1) Insulation. 2) Bamboo or cork. 3) Engineererd products. 4) Agricultural based products.
15. ENVIRONMENTAL QUALITY:
    - A. 4.503.1 Fireplace must be direct-vent, sealed-combustion.
    - B. 4.504.1 At the time of rough installation, during storage on the construction site and until final startup of the heating, cooling, and ventilation equipment, all duct and other related air distribution component openings shall be covered with tape, plastsic, sheetmetal, etc. to reduce the amount of water, dust and debris, which may enter the system.
    - C. 4.504.2 Finish materials shall comply with this section.
    - D. 5.504.2.1 Adhesives, adhesive bonding primers, adhesive primers, sealants, sealant primers, and caulks shall comply with Table 4.504.1 and/or Table 4.504.2.
    - E. 4.504.2.2 All paints and coatings shall comply with Table 4.504.3.
    - F. **4.504.2.3 Aerosol paints and coatings**. Aerosol paints and coatings shall be compliant with product weighted MIR limits for ROC and other toxic compounds.
    - G. **4.504.2.4 Verification**. Documentation shall be provided to verify that compliant VOC limit finish materials have been used
    - H. **4.504.5 Composite wood products.** Hardwood plywood, particleboard and medium density fiberboard composite wood products used on the interior or exterior of the building shall meet the requirements for formaldehyde as specified in ARB's Air Toxics Control Measure for Composite Wood (17 CCR 93J20 et seq.), by or before the dates specified in those sections, as shown in Table 4.504.5.4.505.3 Wall and floor framing shall not be enclosed when the framing members exceed 19% moisture content. Moisture readings shall be taken 2-4 feet from the grade stamped end of each piece to be verified. At least 3 random moisture readings shall be performed on wall and floor framing.
    - I. 4.506.1 Each bathroom shall be mechanically ventilated and shall comply with the following: 1) Fans shall be EnergyStar compliant and be ducted to terminate outside the building. 2) Unless functioning as a component of a whole house vent system, fans must be controlled by a humidity control. Humidity controls shall be capable of adjustment between a relative humidity range of 50-80%. A humidity control may utilize manual or automatic means of adjustment. A humidity control may be a separate component to the exhaust fan and is not required to be integral (built-in).
    - J. 4.507.2 Heating and air-conditioning systems shall be sized, designed, and have their equipment selected using the following ACCA Manuals J, D, and S.
    - K. A4.506.1 Return air filters with values greater than MERV 13 shall be installed on HVAC systems. Pressure drop across the filter shall not exceed 0.1 inches water column.
    - L. **702.1 Installer Training. HVAC system** installers are trained and certified in the proper installation of HVAC systems.

INSULATION:

Ceiling / Roof

1. Shall be insulated to achieve a weighted average U-factor not exceeding U-0.043 or shall be insulated between wood-framing members with insulation resulting in an installed thermal resistance of R-22 or greater for the insulation alone. For vented attics, the mandatory insulation shall be installed at the ceiling level; for unvented attics, the mandatory insulation shall be placed at either ceiling or roof level; and EXCEPTION to Section 150.0(a)1: Ceilings and rafter roofs in an alteration shall be insulated to achieve a weighted average U-factor not exceeding 0.054 or shall be insulated between wood-framing members with insulation resulting in an installed thermal resistance of R-19 or greater
2. Attic access doors shall have permanently attached insulation using adhesive or mechanical fasteners. The attic access shall be gasketed to prevent air leakage; and
3. Insulation shall be installed in direct contact with a continuous roof or ceiling which is sealed to limit infiltration and exfiltration as specified in Section 110.7, including but not limited to placing insulation either above or below the roof deck or on top of a drywall ceiling.

Walls

1. 2x4 inch framing, shall have an overall assembly U-factor not exceeding U-0.102 equivalent to an installed R-value of 13 in a wood framed assembly. EXCEPTION to Section 150.0(c)1: Existing walls already insulated to a U-factor not exceeding U-0.110 or already insulated between framing members with insulation having an installed thermal resistance of R-11 or greater.
2. 2x6 inch or greater, framing shall have an overall assembly U-factor not exceeding U-0.074 or an installed R-value of 19 in a wood framed assembly.
3. Opaque non-framed assemblies shall have an overall assembly U-factor not exceeding U-0.102, equivalent to an installed R-value of 13 in a wood framed assembly.

Raised floor assembly

Raised floors separating conditioned space from unconditioned space or ambient air shall have an overall assembly R-value of 19 or greater in a wood framed assembly.

EXCEPTION to Section 150.0(d): A building with a controlled ventilation or unvented crawlspace may omit raised floor insulation if all of the following are met:
A. The foundation walls are insulated to meet the wall insulation minimums as shown in TABLE 150.1-A; and
B. A Class I or Class II vapor retarder is placed over the entire floor of the crawlspace; and
C. Vents between the crawlspace and outside air are fitted with automatically operated louvers that are temperature actuated; and
D. The requirements in Reference Residential Appendix RA4.5.1.

Slab Edge Insulation

Material used for slab edge insulation shall meet the following minimum specifications:

1. Water absorption rate for the insulation material alone without facings no greater than 0.3 percent when tested in accordance with Test Method A – 24-Hour-Immersion of ASTM C272.
2. Water vapor permeance no greater than 2.0 perm/inch when tested in accordance with ASTM E96.
3. 3. Concrete slab perimeter insulation shall be protected from physical damage and ultraviolet light deterioration.
4. Insulation for a heated slab floor shall meet the requirements of Section 110.8(g)

Water System Piping and Insulation for Piping, Tanks, and Cooling System Lines.

1. Storage tank insulation - Unfired hot water tanks, such as storage tanks and backup storage tanks for solar water-heating systems, shall be externally wrapped with insulation having an installed thermal resistance of R-12 or greater or have internal insulation of at least R-16 and a label on the exterior of the tank showing the insulation R-value.
2. Water piping and cooling system line insulation thickness and conductivity:
3. A. All domestic hot water system piping conditions listed below, whether buried or unburied, must be insulated and the insulation thickness shall be selected based on the conductivity range in TABLE 120.3-A and the insulation level shall be selected from the fluid temperature range based on the thickness requirements in TABLE 120.3-A:
   i. The first 5 feet (1.5 meters) of hot and cold water pipes from the storage tank.
   ii. All piping with a nominal diameter of 3/4 inch (19 millimeter) or larger.
   ii. All piping associated with a domestic hot water recirculation system regardless of the pipe diameter.
   iii. Piping from the heating source to storage tank or between tanks.
   iv. Piping buried below grade..
   v. All hot water pipes from the heating source to the kitchen fixtures.
   B. In addition to insulation requirements, all domestic hot water pipes that are buried below grade must be installed in a water proof and non-crushable casing or sleeve
   C. Pipe for cooling system lines shall be insulated as specified in Subsection A: Distribution piping for steam and hydronic heating systems shall meet the requirements in TABLE 120.3-A.
   EXCEPTION 1 Factory-installed piping within space-conditioning equipment certified under Section 110.1 or 110.2.
   EXCEPTION 2 Piping that serves process loads, gas piping, cold domestic water piping, condensate drains, roof drains, vents, or waste piping.
   EXCEPTION 3 Piping that penetrates framing members shall not be required to have pipe insulation for the distance of the framing penetration. Metal piping that penetrates metal framing shall use grommets, plugs, wrapping or other insulating material to assure that no contact is made with the metal framing. Insulation shall butt securely against all framing members.
   EXCEPTION 4 Piping installed in interior or exterior walls shall not be required to have pipe insulation if all of the requirements are met for compliance with Quality Insulation Installation (QII) as specified in the Reference Residential Appendix RA3.5.
   EXCEPTION 5 Piping installed in attics with a minimum of 4 inches (10 cm) of attic insulation on top of the piping shall not be required to have pipe insulation.
4. Insulation Protection.
   Insulation outside conditioned space shall be protected from damage, including that due to sunlight, moisture, equipment maintenance, and wind. Protection includes but is not limited to the following:
   A. Insulation exposed to weather shall be installed with a cover suitable for outdoor service including, but not limited to aluminum, sheet metal, painted canvas, or plastic cover. The cover shall be water retardant and provides shielding from solar radiation that can cause degradation of the material.
   B. Insulation covering chilled water piping and refrigerant suction piping located outside the conditioned space shall have a Class I or Class II vapor retarder.

LIGHTING

1. All installed luminaires shall be high-efficacy in accordance with TABLE 150.0-A.
2. The number of electrical boxes that are more than 5 feet above the finished floor and do not contain a luminaire or other device shall be no greater than the number of bedrooms. These electrical boxes must be served by a dimmer, vacancy sensor control, or fan speed control.
3. Luminaires recessed into ceilings shall meet all of the following requirements:
   i. Be listed, as defined in Section 100.1, for zero clearance insulation contact (IC) by Underwriters Laboratories or other nationally recognized testing/rating laboratory; and
   ii. Have a label that certifies the luminaire is airtight with air leakage less than 2.0 CFM at 75 Pascals when tested in accordance with ASTM E283. An exhaust fan housing shall not be required to be certified airtight; and
   iii. Be sealed with a gasket or caulk between the luminaire housing and ceiling, and shall have all air leak paths between conditioned and unconditioned spaces sealed with a gasket or caulk; and
   iv. For luminaires with hardwired ballasts or drivers, allow ballast or driver maintenance and replacement to be readily accessible to building occupants from below the ceiling without requiring the cutting of holes in the ceiling; and
   v. Shall not contain screw base sockets
4. Lighting integral to exhaust fans shall meet the applicable requirements of Section 150.0(k).
5. EXCEPTION : Lighting installed by the manufacturer in kitchen exhaust hoods.
6. Screw based luminaires shall meet all of the following requirements:
   i. The luminaires shall not be recessed downlight luminaires in ceilings; and
   ii. The luminaires shall contain lamps that comply with Reference Joint Appendix JA8; and
   iii. The installed lamps shall be marked with "JA8-2016" or "JA8-2016-E" as specified in Reference Joint Appendix JA8.
   EXCEPTION Luminaires with hard-wired ballasts for high intensity discharge lamps.
7. Enclosed Luminaires. Light sources that are not marked "JA8-2016-E" shall not be installed in enclosed luminaires.
8. Interior Lighting Switching Devices and Controls.
   A. All forward phase cut dimmers used with LED light sources shall comply with NEMA SSL 7A.
   B. Exhaust fans shall be switched separately from lighting systems.
   EXCEPTION Lighting integral to an exhaust fan may be on the same switch as the fan provided the lighting can be switched OFF in accordance with the applicable provisions in Section 150.0(k)2 while allowing the fan to continue to operate for an extended period of time.
   C. Luminaires shall be switched with readily accessible controls that permit the luminaires to be manually switched ON and OFF.
   D. Lighting controls and equipment shall be installed in accordance with the manufacturer's instructions.
   E. No controls shall bypass a dimmer or vacancy sensor function where that dimmer or vacancy sensor has been installed to comply with Section 150.0(k).
   F. Lighting controls shall comply with the applicable requirements of Section 110.9.
   G. An Energy Management Control System (EMCS) may be used to comply with dimmer requirements in Section 150.0(k) if at a minimum it provides the functionality of a dimmer in accordance with Section 110.9, meets the installation certificate requirements in Section 130.4, the EMCS requirements in Section 130.5(f), and complies with all other applicable requirements in Section 150.0(k)2.
   H. An Energy Management Control System (EMCS) may be used to comply with vacancy sensor requirements in Section 150.0(k) if at a minimum it provides the functionality of a vacancy sensor in accordance with Section 110.9, meets the installation certificate requirements in Section 130.4, the EMCS requirements in Section 130.5(f) and complies with all other applicable requirements in Section 150.0(k)2.
   I. A multiscene programmable controller may be used to comply with dimmer requirements in Section 150.0(k) if at a minimum it provides the functionality of a dimmer in accordance with Section 110.9, and complies with all other applicable requirements in Section 150.0(k)2.
   J. In bathrooms, garages, laundry rooms, and utility rooms, at least one luminaire in each of these spaces shall be controlled by a vacancy sensor.
   K. Dimmers or vacancy sensors shall control all luminaires required to have light sources compliant with Reference Joint Appendix JA8.
   EXCEPTION 1- Luminaires in closets less than 70 square feet.
   EXCEPTION 2 - Luminaires in hallways.
   L. Undercabinet lighting shall be switched separately from other lighting systems.
9. Residential Outdoor Lighting.
   In addition to meeting the requirements of Section 150.0(k)1A, luminaires providing residential outdoor lighting shall meet the following requirements, as applicable:
   A. For single-family residential buildings, outdoor lighting permanently mounted to a residential building or to other buildings on the same lot, shall meet the requirement in item i and the requirements in either item ii or item iii:
   i. Controlled by a manual ON and OFF switch that does not override to ON the automatic actions of Items ii or iii below; and
   ii. Controlled by photocell and motion sensor. Controls that override to ON shall not be allowed unless the override automatically reactivates the motion sensor within 6 hours; or
   iii. Controlled by one of the following methods:
   a. Photocontrol and automatic time switch control. Controls that override to ON shall not be allowed unless the override shall automatically return the photocontrol and automatic time switch control to its normal operation within 6 hours; or
   b. Astronomical time clock. Controls that override to ON shall not be allowed unless the override shall automatically return the astronomical clock to its normal operation within 6 hours and which is programmed to automatically turn the outdoor lighting OFF during daylight hours; or
   c. Energy management control system which meets all of the following requirements:
   A. At a minimum provides the functionality of an astronomical time clock in accordance with Section 110.9; meets the Installation Certification requirements in Section 130.4; does not have an override or bypass switch that allows the luminaire to be always ON; and, is programmed to automatically turn the outdoor lighting OFF during daylight hours.

WATER HEATING SYSTEM

Systems using gas or propane water heaters to serve individual dwelling units shall include the following components:

1. A 120V electrical receptacle that is within 3 feet from the water heater and accessible to the water heater with no obstructions; and
2. A Category III or IV vent, or a Type B vent with straight pipe between the outside termination and the space where the water heater is installed; and
3. A condensate drain that is no more than 2 inches higher than the base of the installed water heater, and allows natural draining without pump assistance, and
4. A gas supply line with a capacity of at least 200,000 Btu/hr.
5. Water heating recirculation loops serving multiple dwelling units shall meet the requirements of Section 110.3(c)5.
6. Solar water-heating systems and collectors shall be certified and rated by the Solar Rating and Certification Corporation (SRCC), or by a listing agency that is approved by the Executive Director.
7. Instantaneous water heaters with an input rating greater than 6.8 kBTU/hr (2kW) shall meet the requirements of Section 110.3(c)7.

TABLE 150.0-A CLASSIFICATION OF HIGH EFFICACY LIGHT SOURCES

High Efficacy Light Sources
Luminaires installed with only the lighting technologies in this table shall be classified as high efficacy

Light sources in this column other than those installed in ceiling recessed downlight luminaires are classified as high efficacy and are not required to comply with Reference Joint Appendix JA8	Light sources in this column shall be certified to the Commission as High Efficacy Light Sources in accordance with Reference Joint Appendix JA8 and be marked as meeting JA8.
1. Pin-based linear or compact fluorescent light sources using electronic ballasts. 2. Pulse-start metal halide. 3. High pressure sodium. 4. GU-24 sockets containing light sources other than LEDs. a,b 5. Luminaires with hardwired high frequency generator and induction lamp. 6. Inseparable SSL luminaires that are installed outdoors. 7. Inseparable SSL luminaires containing colored light sources that are installed to provide decorative lighting.	8. All light sources in ceiling recessed downlight luminaires. Note that ceiling recessed downlight luminaires shall not have screw bases regardless of lamp type as described in Section 150.0(k)1C 9. GU-24 sockets containing LED light sources. 10. Any light source not otherwise listed in this table and certified to the Commission as complying with Joint Appendix 8.

Notes:
a. GU-24 sockets containing light sources such as compact fluorescent lamps and induction lamps.
b. California Title 20 Section 1605(k)3 does not allow incandescent sources to have a GU-24 base.

TABLE 120.3-A PIPE INSULATION THICKNESS

FLUID TEMPERATURE RANGE (°F)	CONDUCTIVITY RANGE (in Btu-inch per hour per square foot per °F)	INSULATION MEAN RATING TEMPERATURE (°F)	NOMINAL PIPE DIAMETER (in inches)				
			< 1	1 to <1.5	1.5 to < 4	4 to < 8	8 and larger
			INSULATION THICKNESS REQUIRED (in inches)				
Space heating, Hot Water systems (steam, steam condensate and hot water) and Service Water Heating Systems							
Above 350	0.32-0.34	250	4.5	5.0	5.0	5.0	5.0
251-350	0.29-0.31	200	3.0	4.0	4.5	4.5	4.5
201-250	0.27-0.30	150	2.5	2.5	2.5	3.0	3.0
141-200	0.25-0.29	125	1.5	1.5	2.0	2.0	2.0
105-140	0.22-0.28	100	1.0	1.5	1.5	1.5	1.5
Space cooling systems (chilled water, refrigerant and brine)							
40-60	0.21-0.27	75	0.5	0.5	1.0	1.0	1.0
Below 40	0.20-0.26	50	1.0	1.5	1.5	1.5	1.5

NEW ATTACHED ADU
STUDIO MODULE
(763B LAKEVIEW AVE.)

763 LAKEVIEW AVE.
SAN FRANCISCO, CA 94112

N

AKD homes
ACCESSORY DWELLING UNITS
WWW.AKDHOMES.COM
EMAIL: DESIGN@AKDHOMES.NET
TEL: 510-314-0564

ISSUANCES

No.	Description	Date
1	PLANNING	5.16.22

Designed By: Janelle Vargas

email: jburnett@disenodesign.net phone: 620-655-8299

NOTES

APPROVED
Dept. of Building Insp.
-San Francisco-
08/06/2024

Drawing Scale: 1/4" = 1'-0"

Job No. PLANS

A-0.1

FIRE SAFETY DURING CONSTRUCTION AND DEMOLITION

TEMPORARY HEATING EQUIPMENT (SEC 3303)

3303.1 Listed

Temporary heating devices shall be *listed* and *labeled* in accordance with the California Code. Installation, maintenance and use of temporary heating devices shall be in accordance with the terms of the listing.
3303.2 Oil-Fired Heaters
Oil-fired heaters shall comply with Section 603.
3303.3 LP-gas Heaters
Fuel supplies for liquefied-petroleum gas-fired heaters shall comply with Chapter 61 and the California Mechanical Code.
3303.4 Refueling
Refueling operations for liquid-fueled equipment or appliances shall be conducted in accordance with Section 3405. The equipment or appliance shall be allowed to cool prior to refueling.
3303.5 Installation
Clearance to combustibles from temporary heating devices shall be maintained in accordance with the *labeled* equipment. When in operation, temporary heating devices shall be fixed in place and protected from damage, dislodgement or overturning in accordance with the manufacturer's instructions.
3303.6 Supervision
The use of temporary heating devices shall be supervised and maintained only by competent personnel.
PRECAUTIONS AGAINST FIRE (3304)
3304.1 Smoking
Smoking shall be prohibited except in *approved* areas. Signs shall be posted in accordance with Section 310. In *approved* areas where smoking is permitted, *approved* ashtrays shall be provided in accordance with Section 310.
3304.2 Combustible debris, rubbish and waste
Combustible debris, rubbish and waste material shall comfy with the requirements of Sections 3304.2.1 through 3304.2.4
3304.2.1 Combustible waste material accumulation. Combustible debris, rubbish and waste material not be accumulated within buildings.
3304.2.2 Combustible waste material removal. Combustible debris, rubbish, and waste material shall be removed from buildings at the end of each shift of work.
3302.2.3 Rubbish containers. Where rubbish containers with capacity exceeding 5.33 cubic feet (40 gallons) (0.15 m3) are used for temporary storage of combustible debris, rubbish and waste material, they shall have tight-fitting or self-closing lids. Such rubbish containers shall be constructed entirely of materials that comply with either of the following:
1. Noncombustible materials.
2. Materials that meet a peak rate of the heat release not exceeding 300 kW/m2 when tested in accordance with ASTM E1354 at an incident heat flux of 50 kW/m2 in the horizontal orientation.

3304.2.4 Spontaneous Ignition

Materials susceptible to spontaneous ignition, such as oily rags, shall be stored in a *listed* disposal container.

3304.3 Burning of Combustible debris, rubbish and waste.

Combustible debris, rubbish and waste material shall not be disposed of by burning on the site unless approved.

3304.3 Open Burning
Open burning shall comply with Section 307.
3304.5 Fire Watch
When required by the *fire code official* for building demolition, or building construction during working hours that is hazardous in nature, qualified personnel shall be provided to serve as an on-site fire watch. Fire watch personnel shall be provided with at least one *approved* means for notification of the fire department and their sole duty shall be to perform constant patrols and watch for the occurrence of fire.
3304.6 Cutting and Welding
Operations involving the use of cutting and welding shall be done in accordance with Chapter 35.
3304.7 Electrical

Temporary wiring for electrical power and lighting installations used in connection with the construction, *alteration* or demolition of buildings, structures, equipment or similar activities shall comply with California Electrical Code
Flammable and Combustible Liquids (3305)
3305.1 Storage of Flammable and Combustible Liquids
Storage of flammable and *combustible liquids* shall be in accordance with Section 5704.
3305.2 Class I and Class II Liquids
The storage, use and handling of flammable and *combustible liquids* at construction sites shall be in accordance with Section 5706.2. Ventilation shall be provided for operations involving the application of materials containing flammable solvents.
3305.3 Housekeeping
Flammable and combustible liquid storage areas shall be maintained clear of combustible vegetation and waste materials. Such storage areas shall not be used for the storage of combustible materials.
3305.4 Precautions Against Fire
Sources of ignition and smoking shall be prohibited in flammable and *combustible liquid* storage areas. Signs shall be posted in accordance with Section 310.
3305.5 Handling at Point of Final Use
Class I and II liquids shall be kept in *approved* safety containers.
3305.6 Leakage and Spills
Leaking vessels shall be immediately repaired or taken out of service and spills shall be cleaned up and disposed of properly.

Flammable Gases (3306)
3306.1 Storage and Handling
The storage, use and handling of flammable gases shall comply with Chapter 58.
3306.2 Cleaning with flammable gas.
Flammable gases shall not be used to clean or remove debris from piping open to the atmosphere.
3306.2.1 Pipe cleaning and purging. The cleaning and pouring of flammable gas piping systems, including cleaning new or existing piping systems, purging piping systems into service and purging piping systems out of service, shall comply with NFTA 56.
Exceptions:
1. Compressed gas piping systems other than fuel gas piping systems where in accordance with Chapter 53.
2. Piping systems regulated by the California Mechanical Code
3. Liquefied petroleum gas systems in accordance with Chapter 61.

Explosive Materials (3307)

3307.1 Storage and Handling

Explosive materials shall be stored, used and handled in accordance with Chapter 56.

3307.2 Supervision

Blasting operations shall be conducted in accordance with Chapter 56.

3307.3 Demolition Using Explosives

Approved fire hoses for use by demolition personnel shall be maintained at the demolition site whenever *explosives* are used for demolition. Such fire hoses shall be connected to an *approved* water supply and shall be capable of being brought to bear on post-*detonation* fires anywhere on the site of the demolition operation.

Owner's Responsibility for Fire Protection (3308)

3308.1 Program Superintendent

The *owner* shall designate a *person* to be the fire prevention program superintendent who shall be responsible for the fire prevention program and ensure that it is carried out through completion of the project. The fire prevention program superintendent shall have the authority to enforce the provisions of this chapter and other provisions as necessary to secure the intent of this chapter. Where guard service is provided, the superintendent shall be responsible for the guard service.

3308.2 Prefire Plans

The fire prevention program superintendent shall develop and maintain an *approved* prefire plan in cooperation with the fire chief. The fire chief and the *fire code official* shall be notified of changes affecting the utilization of information contained in such prefire plans.

3308.3 Training

Training of responsible personnel in the use of fire protection equipment shall be the responsibility of the fire prevention program superintendent.

3308.4 Fire Protection Devices

The fire prevention program superintendent shall determine that all fire protection equipment is maintained and serviced in accordance with this code. The quantity and type of fire protection equipment shall be *approved*.

3308.5 Hot Work Operations

The fire prevention program superintendent shall be responsible for supervising the system for hot work operations in accordance with Chapter 26

3308.6 Impairment of Fire Protection Systems

Impairments to any *fire protection system* shall be in accordance with Chapter 9

3308.7 Temporary Covering of Fire Protection Devices

Coverings placed on or over fire protection devices to protect them from damage during construction processes shall be immediately removed upon the completion of the construction processes in the room or area in which the devices are installed.

Fire Reporting (3309)

3309.1 Emergency Telephone

Readily accessible emergency telephone facilities shall be provided in an *approved* location at the construction site. The street address of the construction site and the emergency telephone number of the fire department shall be posted adjacent to the telephone.

Access for Fire Fighting (3310)

3310.1 Required Access

Approved vehicle access for fire fighting shall be provided to all construction or demolition sites. Vehicle access shall be provided to within 100 feet (30 480 mm) of temporary or permanent fire department connections. Vehicle access shall be provided by either temporary or permanent roads, capable of supporting vehicle loading under all weather conditions. Vehicle access shall be maintained until permanent fire apparatus access roads are available.

3310.2 Key Boxes

Key boxes shall be provided as required by Chapter 5.

Means of Egress (3311)

3311.1 Stairways Required

Where a building has been constructed to a *building height* of 50 feet (15 240 mm) or four stories, or where an existing building exceeding 50 feet (15 240 mm) in *building height* is altered, not less than one temporary lighted *stairway* shall be provided unless one or more of the permanent *stairways* are erected as the construction progresses.

3311.2 Maintenance

Required *means of egress* shall be maintained during construction and demolition, remodeling or *alterations* and additions to any building.

Exception: *Approved* temporary *means of egress* systems and facilities.

Water Supply for Fire Protection (3312)

3312.1 When Required. An *approved* water supply for fire protection, either temporary or permanent, shall be made available as soon as combustible material arrives on the site.

Standpipes (3313)

3313.1 Where Required. In buildings required to have standpipes by Section 905.3.1, not less than one standpipe shall be provided for use during construction. Such standpipes shall be installed when the progress of construction is not more than 40 feet (12 192 mm) in height above the lowest level of fire department vehicle access. Such standpipe shall be provided with fire department hose connections at accessible locations adjacent to usable stairs. Such standpipes shall be extended as construction progresses to within one floor of the highest point of construction having secured decking or flooring.

3313.2 Buildings Being Demolished. Where a building is being demolished and a standpipe is existing within such a building, such standpipe shall be maintained in an operable condition so as to be available for use by the fire department. Such standpipe shall be demolished with the building but shall not be demolished more than one floor below the floor being demolished.

3313.3 Detailed Requirements. Standpipes shall be installed in accordance with the provisions of Section 905.

Exception: Standpipes shall be either temporary or permanent in nature, and with or without a water supply, provided that such standpipes comply with the requirements of Section 905 as to capacity, outlets and materials.

Automatic Sprinkler System (3314)

3314.1 Completion Before Occupancy. In buildings where an *automatic sprinkler system* is required by this code or the *California Building Code*, it shall be unlawful to occupy any portion of a building or structure until the *automatic sprinkler system* installation has been tested and *approved*, except as provided in Section 105.3.4.

3314.2 Operation of Valves. Operation of sprinkler control valves shall be allowed only by properly authorized personnel and shall be accompanied by notification of duly designated parties. When the sprinkler protection is being regularly turned off and on to facilitate connection of newly completed segments, the sprinkler control valves shall be checked at the end of each work period to ascertain that protection is in service.

Portable Fire Extinguishers (3315)

3315.1 Where Required. Structures under construction, *alteration* or demolition shall be provided with not less than one *approved* portable fire extinguisher in accordance with Section 906 and sized for not less than ordinary hazard as follows:

1. At each *stairway* on all floor levels where combustible materials have accumulated
2. In every storage and construction shed.
3. Additional portable fire extinguishers shall be provided where special hazards exist including, but not limited to, the storage and use of flammable and *combustible liquids*.

Motorized Equipment (3316)

3316.1 Conditions of Use. Internal-combustion-powered construction equipment shall be used in accordance with all of the following conditions:

1. Equipment shall be located so that exhausts do not discharge against combustible material.
2. Exhausts shall be piped to the outside of the building.
3. Equipment shall not be refueled while in operation.
4. Fuel for equipment shall be stored in an *approved* area outside of the building.

Safeguarding Roofing Operations (3317)

3317.1 General/ Roofing operations utilizing heat-producing systems or other ignition sources shall be conducted in accordance with Sections 3317.2 and 3317.3 and Chapter 35.

3317.2 Asphalt and Tar Kettles. Asphalt and tar kettles shall be operated in accordance with Section 303.

3317.3 Fire Extinguishers for Roofing Operations. Fire extinguishers shall comply with Section 906. There shall be not less than one multipurpose portable fire extinguisher with a minimum 3-A 40-B:C rating on the roof being covere

4. Impact of Project on Existing Protected Sites

If your responses above indicate that any Protected Tree(s) exist on, over or adjacent to the subject property, please check the applicable boxes, below:

BOX 1 ☐ **The project may have an impact on one or more Protected Trees which are not proposed for removal, as follows:** Either (1) any construction-related activity, no matter how minor, is planned or is reasonably foreseeable to occur within the dripline of a Significant Tree or Street Tree or (2) regardless of the location of construction activity, the property contains a Landmark Tree.

Construction activities would include, but are not limited to the following: (1) Grading or excavation within the dripline of any Significant Tree or Street Tree. (2) Construction staging and/or storage of materials and/or equipment within the **dripline** of any Significant Tree or Street Tree. (3) Any activity that might necessitate pruning of a Significant Tree or Street Tree. (4) Dumping of trash and/or liquids (such as project waste water) within the basin or dripline of any Significant Tree or Street Tree.

If you have checked this box, a Tree Protection Plan must be submitted and approved by San Francisco Public Works Bureau of Urban Forestry prior to the commencement of any construction activity.

Such plan must meet the following minimum standards and be approved by SF Public Works:

✓ The Tree Protection Plan must be developed by an International Society of Arboriculture (ISA) Certified Arborist.

Site plans submitted along with the associated construction project must clearly indicate the street, curb, sidewalk, driveway, structure(s), and the locations of all Protected Trees and non-protected trees. Protected Trees must also be shown to include accurate tree height, accurate canopy dripline and trunk and canopy diameters. The plans must graphically depict implementation of all measures called for in the Tree Protection Plan.

BOX 2 ☐ **The project involves the removal of one or more Protected Trees**. A permit from San Francisco Public Works is required in order to remove any Protected Tree. The Planning Department will not approve a building permit for a project which involves the removal of a Protected Tree unless San Francisco Public Works has first reviewed the proposal and found it to be consistent with applicable rules and regulations.

If you have any existing, remaining trees not proposed for removal a Tree Protection Plan is required and must be approved by San Francisco Public Works Bureau of Urban Forestry prior to the commencement of any construction activity. Refer to minimum standards above.

BOX 3 ☒ **Project will not remove or have any other impact on Protected Trees.**

Failure to protect existing trees could result in a citation from San Francisco Public Works and hold up the issuance of the building permit.

Required Checklist for Construction Related Trees

5. Calculation of Number of New Required Street Trees

One street tree is required for each 20 feet of street frontage of the subject property, any additional 10' of frontage will be rounded up, however credit is given for existing street trees. Please complete the table below to determine the number of street trees required for your project. If no street trees are required, please skip to the Applicant's Affidavit at the end of this form and once signed, return it to the Planning Department along with your Building Permit Application or other application.

Combined Lengthof All Street Frontages	Divided by Tree Spacing Requirement	Gross Number of Trees Required	Minus Number of Existing Trees	Net Street Tree Requirement
25' - 0''	÷20′	= 1.25 (rounded)	- 2	= 0

Unless site conditions physically prevent the planting of a street tree, a waiver or modification of street tree requirements is available only under extremely limited circumstances and **only outside of Residential Districts** (i.e. RH, RM, RTO, RED). **Be aware that even when available, an in-kind improvement or in-lieu payment is required for every such waiver.**

6. Applicant's Affidavit

I hereby attest under penalty of perjury that the information I have entered on this document is true and correct to the best of my knowledge, and that I have read and understood this form, and that I am the property owner or authorized agent of the property owner, familiar with the property, and able to provide accurate and complete information herein.

The undersigned agrees to the conditions of this form. I understand that knowingly or negligently providing false or misleading information in response to this disclosure requirement may lead to denial or rescission of my permit or other authorization and may constitute a violation of the San Francisco Municipal Code, which can lead to criminal and/or civil legal action and the imposition of administrative fines.

I understand that should my project be subject to a required Tree Protection Plan, that I will have a plan meeting or exceeding the minimum requirements prepared and submit it to San Francisco Public Works prior to the commencement of any construction activities. Such submittal may be made in person, by mail or via e-mail at urbanforestrypermits@sfdpw.org.

Signature	Date
Kalan Camero	7-6-22
Print Name	☐ Owner ☒ Authorized Agent
KALAN CAMERO	
Phone Number	**E-Mail**
650-241-5384	kalan@akdhomes.net

Submit this completed checklist to San Francisco Public Works via e-mail to urbanforestrypermits@sfdpw.org.

Contact Urban Forestry at 628-652-TREE(8733) with questions.

Failure to protect existing trees could result in a citation from San Francisco Public Works and hold up the issuance of the building permit.

SAN FRANCISCO PUBLIC WORKS

Urban Forestry
urbanforestry@sfdpw.org | T. 628.652.8733 | 49 South Van Ness Ave. Suite 1000, San Francisco, CA 94103

Required Checklist for

Tree Planting and Protection

Pursuant to Public Works Code Article 16, many construction projects trigger requirements for the protection of existing trees and/or the planting of new street trees.

This checklist must be completed for all construction-related projects as defined below. You may be required to submit a Tree Protection Plan and Review fee of $151.00.

What does this checklist do?

This checklist describes applicable tree-related requirements and will help you design a Code-compliant project. Completion of this checklist is a requirement for projects meeting any of the criteria identified below. **No permit will be issued by the City before satisfying all applicable tree-related requirements**, including receiving clearance from the San Francisco Public Works to plant required street trees and/or remove any Protected Trees.

Why are existing trees protected and new trees required?

Trees are a vital component of the City's built and natural environments. They filter and contain storm water, lessen air pollution and greenhouse gases, help save energy, provide wildlife habitat and increase property values. The City is currently home to more than 100,000 street trees.

Instructions

Requirements for new street trees and tree protection apply to the the types of projects identified in the chart below. Please check all boxes which apply to your project. If no boxes are checked, you do not need to complete this form.

Development Features

☐ Addition of a garage
☒ Addition of a new dwelling unit
☐ Addition of a curb cut Construction of a new building
☐ Net addition to an existing building of 500 gross sq. ft or more

An applicant for a project which meets **any** of the criteria identified above must complete this checklist and submit a copy of it to Urban Forestry along with the tree planting, removal and/or protection plan application.

Not all projects meeting the criteria above will be subject to tree protection and/or installation requirements. For example, if at least one street tree already exists for each 20 feet of street frontage, no new street trees will be required. Likewise, only certain trees, such as Street Trees and Significant Trees, must be protected.

1. Applicant Information

Contact Name: KALAN CAMERO
Address: 3518 ARDEN WAY, HAYWARD , CA 94545
E-Mail Address: kalan@akdhomes.net Phone #: 650-241-5384

2. Site Information

Site Address: 763 LAKEVIEW AVE. SAN FRANCISCO, CA 94112

Combined Length of all frontages 25' - 0" Building Permit Number 202206035607

Required Checklist for Construction Related Trees

3. Disclosure of Existing Protected Tree(s)

Only the following specific types of trees require protection under the Public Works Code. These trees are collectively known as "Protected Trees." Please indicate the presence or lack thereof of such on, over, or adjacent to the parcel containing the proposed construction. Check all boxes that apply and indicate quantity of each tree type, if appropriate.

Street Trees: A tree growing within the public right of way (e.g. sidewalk) that is not also a Landmark Tree. *Regardless of size, all trees in the public right of way are protected under Article 16 of the Public Works Code.*

☒ Street Trees exist adjacent to the subject property. AQTY: 2
☐ Street Tree(s) proposed for removal B QTY:
☐ There are no Street Trees adjacent to the subject property. C : (A - B)

Significant Trees: A tree that is planted on the subject property (i.e. outside of the public right-of-way) with any portion of its trunk within 10 feet of the public right-of-way that has (a) a diameter at breast height (DBH) in excess of twelve inches **OR** (b) a height in excess of twenty feet **OR** (c) a canopy in excess of fifteen feet. *If you are unsure of the boundary of the public right of way, contact San Francisco Public Works' Bureau of Street Use and Mapping. Please note that the public right of way may be wider than the sidewalk*

☒ Significant Tree(s) exist on the subject property AQTY: 1
☐ Significant Tree(s) exist on any adjacent property AQTY:
☐ Significant Tree(s) proposed for removal B QTY:
☐ There are no Significant Trees on or adjacent to the subject property C : (A + A) - B

Landmark Trees: A tree designated as such by the Board of Supervisors owing to particular age, size, shape, species, location, historical association, visual quality, or other contribution to the City's character. *If you have questions about the presence of Landmark Trees, please consult with San Francisco Public Works or visit www.sfpublicworks.org/trees*

☐ Landmark Trees exist on the subject property AQTY:
☐ Landmark Trees exist on the adjacent sidewalk AQTY:
☐ Landmark Trees exist on the adjacent property AQTY:
☐ Landmark Tree(s) proposed for removal B QTY:
☐ There are no Landmark Trees on or adjacent to the subject property. C : (A + A + A) - B

Total Number of Protected Trees

Total : 3
Add all 'C's

If there are one or more protected trees total, you MUST complete submit a Tree Protection Site Plan along with the $151 processing fee payable to CCSF-DPW-BUF.

See section Five and refer to code at http://sfdpw.org/protection-trees-and-landscape-material

Is the required Tree Protection Site Plan enclosed? Yes YES

Official Use Only - Tree Protection Plan Required_____ Processing Fee Paid_____

Failure to protect existing trees could result in a citation from San Francisco Public Works and hold up the issuance of the building permit.

NEW ATTACHED ADU
STUDIO MODULE
(763B LAKEVIEW AVE.)

763 LAKEVIEW AVE.
SAN FRANCISCO, CA 94112

AKD homes
ACCESSORY DWELLING UNITS

WWW.AKDHOMES.COM
EMAIL: DESIGN@AKDHOMES.NET
TEL: 510-3140564

ISSUANCES

No.	Description	Date
1	PLANNING	5.16.22

Designed By: Janelle Vargas

email: jburnett@disenodesign.net phone: 620-655-8299

NOTES

APPROVED
Dept. of Building Insp.
-San Francisco-
08/06/2024

Drawing Scale: 1/4" = 1'-0"

Job No. PLANS

A-0.2

SAN MATEO COUNTYWIDE
Water Pollution Prevention Program
Clean Water. Healthy Community.

Construction Best Management Practices (BMPs)

Construction projects are required to implement the stormwater best management practices (BMP) on this page, as they apply to your project, all year long.

Materials & Waste Management

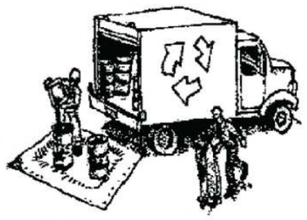

Non-Hazardous Materials

- ❑ Berm and cover stockpiles of sand, dirt or other construction material with tarps when rain is forecast or if not actively being used within 14 days.
- ❑ Use (but don't overuse) reclaimed water for dust control.

Hazardous Materials

- ❑ Label all hazardous materials and hazardous wastes (such as pesticides, paints, thinners, solvents, fuel, oil, and antifreeze) in accordance with city, county, state and federal regulations.
- ❑ Store hazardous materials and wastes in water tight containers, store in appropriate secondary containment, and cover them at the end of every work day or during wet weather or when rain is forecast.
- ❑ Follow manufacturer's application instructions for hazardous materials and be careful not to use more than necessary. Do not apply chemicals outdoors when rain is forecast within 24 hours.
- ❑ Arrange for appropriate disposal of all hazardous wastes.

Waste Management

- ❑ Cover waste disposal containers securely with tarps at the end of every work day and during wet weather.
- ❑ Check waste disposal containers frequently for leaks and to make sure they are not overfilled. Never hose down a dumpster on the construction site.
- ❑ Clean or replace portable toilets, and inspect them frequently for leaks and spills.
- ❑ Dispose of all wastes and debris properly. Recycle materials and wastes that can be recycled (such as asphalt, concrete, aggregate base materials, wood, gyp board, pipe, etc.)
- ❑ Dispose of liquid residues from paints, thinners, solvents, glues, and cleaning fluids as hazardous waste.

Construction Entrances and Perimeter

- ❑ Establish and maintain effective perimeter controls and stabilize all construction entrances and exits to sufficiently control erosion and sediment discharges from site and tracking off site.
- ❑ Sweep or vacuum any street tracking immediately and secure sediment source to prevent further tracking. Never hose down streets to clean up tracking.

Equipment Management & Spill Control

Maintenance and Parking

- ❑ Designate an area, fitted with appropriate BMPs, for vehicle and equipment parking and storage.
- ❑ Perform major maintenance, repair jobs, and vehicle and equipment washing off site.
- ❑ If refueling or vehicle maintenance must be done onsite, work in a bermed area away from storm drains and over a drip pan or drop cloths big enough to collect fluids. Recycle or dispose of fluids as hazardous waste.
- ❑ If vehicle or equipment cleaning must be done onsite, clean with water only in a bermed area that will not allow rinse water to run into gutters, streets, storm drains, or surface waters.
- ❑ Do not clean vehicle or equipment onsite using soaps, solvents, degreasers, or steam cleaning equipment.

Spill Prevention and Control

- ❑ Keep spill cleanup materials (e.g., rags, absorbents and cat litter) available at the construction site at all times.
- ❑ Inspect vehicles and equipment frequently for and repair leaks promptly. Use drip pans to catch leaks until repairs are made.
- ❑ Clean up spills or leaks immediately and dispose of cleanup materials properly.
- ❑ Do not hose down surfaces where fluids have spilled. Use dry cleanup methods (absorbent materials, cat litter, and/or rags).
- ❑ Sweep up spilled dry materials immediately. Do not try to wash them away with water, or bury them.
- ❑ Clean up spills on dirt areas by digging up and properly disposing of contaminated soil.
- ❑ Report significant spills immediately. You are required by law to report all significant releases of hazardous materials, including oil. To report a spill: 1) Dial 911 or your local emergency response number, 2) Call the Governor's Office of Emergency Services Warning Center, (800) 852-7550 (24 hours).

Earthmoving

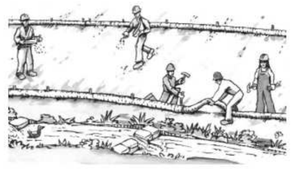

- ❑ Schedule grading and excavation work during dry weather.
- ❑ Stabilize all denuded areas, install and maintain temporary erosion controls (such as erosion control fabric or bonded fiber matrix) until vegetation is established.
- ❑ Remove existing vegetation only when absolutely necessary, and seed or plant vegetation for erosion control on slopes or where construction is not immediately planned.
- ❑ Prevent sediment from migrating offsite and protect storm drain inlets, gutters, ditches, and drainage courses by installing and maintaining appropriate BMPs, such as fiber rolls, silt fences, sediment basins, gravel bags, berms, etc.
- ❑ Keep excavated soil on site and transfer it to dump trucks on site, not in the streets.

Contaminated Soils

- ❑ If any of the following conditions are observed, test for contamination and contact the Regional Water Quality Control Board:
  - Unusual soil conditions, discoloration, or odor.
  - Abandoned underground tanks.
  - Abandoned wells
  - Buried barrels, debris, or trash.

Paving/Asphalt Work

- ❑ Avoid paving and seal coating in wet weather or when rain is forecast, to prevent materials that have not cured from contacting stormwater runoff.
- ❑ Cover storm drain inlets and manholes when applying seal coat, tack coat, slurry seal, fog seal, etc.
- ❑ Collect and recycle or appropriately dispose of excess abrasive gravel or sand. Do NOT sweep or wash it into gutters.
- ❑ Do not use water to wash down fresh asphalt concrete pavement.

Sawcutting & Asphalt/Concrete Removal

- ❑ Protect nearby storm drain inlets when saw cutting. Use filter fabric, catch basin inlet filters, or gravel bags to keep slurry out of the storm drain system.
- ❑ Shovel, abosorb, or vacuum saw-cut slurry and dispose of all waste as soon as you are finished in one location or at the end of each work day (whichever is sooner!).
- ❑ If sawcut slurry enters a catch basin, clean it up immediately.

Concrete, Grout & Mortar Application

- ❑ Store concrete, grout, and mortar away from storm drains or waterways, and on pallets under cover to protect them from rain, runoff, and wind.
- ❑ Wash out concrete equipment/trucks offsite or in a designated washout area, where the water will flow into a temporary waste pit, and in a manner that will prevent leaching into the underlying soil or onto surrounding areas. Let concrete harden and dispose of as garbage.
- ❑ When washing exposed aggregate, prevent washwater from entering storm drains. Block any inlets and vacuum gutters, hose washwater onto dirt areas, or drain onto a bermed surface to be pumped and disposed of properly.

Landscaping

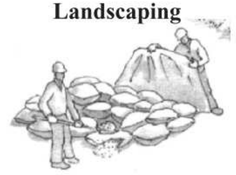

- ❑ Protect stockpiled landscaping materials from wind and rain by storing them under tarps all year-round.
- ❑ Stack bagged material on pallets and under cover.
- ❑ Discontinue application of any erodible landscape material within 2 days before a forecast rain event or during wet weather.

Painting & Paint Removal

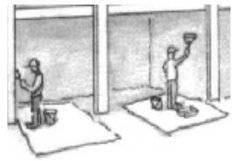

Painting Cleanup and Removal

- ❑ Never clean brushes or rinse paint containers into a street, gutter, storm drain, or stream.
- ❑ For water-based paints, paint out brushes to the extent possible, and rinse into a drain that goes to the sanitary sewer. Never pour paint down a storm drain.
- ❑ For oil-based paints, paint out brushes to the extent possible and clean with thinner or solvent in a proper container. Filter and reuse thinners and solvents. Dispose of excess liquids as hazardous waste.
- ❑ Paint chips and dust from non-hazardous dry stripping and sand blasting may be swept up or collected in plastic drop cloths and disposed of as trash.
- ❑ Chemical paint stripping residue and chips and dust from marine paints or paints containing lead, mercury, or tributyltin must be disposed of as hazardous waste. Lead based paint removal requires a state-certified contractor.

Dewatering

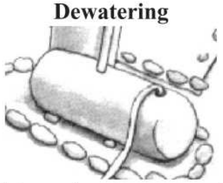

- ❑ Discharges of groundwater or captured runoff from dewatering operations must be properly managed and disposed. When possible send dewatering discharge to landscaped area or sanitary sewer. If discharging to the sanitary sewer call your local wastewater treatment plant.
- ❑ Divert run-on water from offsite away from all disturbed areas.
- ❑ When dewatering, notify and obtain approval from the local municipality before discharging water to a street gutter or storm drain. Filtration or diversion through a basin, tank, or sediment trap may be required.
- ❑ In areas of known or suspected contamination, call your local agency to determine whether the ground water must be tested. Pumped groundwater may need to be collected and hauled off-site for treatment and proper disposal.

Storm drain polluters may be liable for fines of up to $10,000 per day!

NEW ATTACHED ADU
STUDIO MODULE
(763B LAKEVIEW AVE.)

763 LAKEVIEW AVE.
SAN FRANCISCO, CA 94112

AKD homes
ACCESSORY DWELLING UNITS
WWW.AKDHOMES.COM
EMAIL: DESIGN@AKDHOMES.NET
TEL: 510-314-0564

ISSUANCES

No.	Description	Date
1	PLANNING	5.16.22

Designed By: Janelle Vargas

email: jburnett@disenodesign.net phone: 620-655-8299

BPM

APPROVED
Dept. of Building Insp.
San Francisco
08/06/2024

Drawing Scale:

Job No. PLANS

A-0.3

City and County of San Francisco
Department of Building Inspection

London N. Breed, Mayor
Tom C. Hui, S.E., C.B.O., Director

Attachment RP

NOTICE

TITLE-24 LOW-RISE RESIDENTIAL ENERGY INSPECTION REQUIREMENTS (PLUMBING)

Please note that Certificates of Installation and/or Acceptance and/or Verification are required for this project, as indicated on this form issued with this permit. Ensuring the accurate completion of this documentation is the direct responsibility of the engineer/architect of record. This documentation is required *in addition to* the called inspections performed by the Department of Building Inspection.

For questions regarding the details or extent of required documentation or testing, and if there are any field problems regarding documentation or testing, please call your District Building Inspector or 415-558-6570.

Before final building inspection is scheduled, documentation of energy compliance "Certificate of Installation, Acceptance, and Verification" must be completed and signed by the responsible person in charge. ***The permit will not be finalized without compliance with the energy inspection requirements.***

Energy Inspection Services Contact Information

1. **Telephone: (415) 558-6132**
2. **Fax: (415) 558-6474**
3. **Email: dbi.energyinspections@sfgov.org**
4. **In person: 3rd floor at 1660 Mission St.**

Note: We are moving towards a 'paperless' mode of operation. All special inspection submittals, including final letters, may be emailed (preferred) or faxed. We will also be shifting to a paperless fax receipt mode.

Installation, Acceptance, and Verification certificates can be found on the California Energy Commission website at https://www.energy.ca.gov/programs-and-topics/programs/building-energy-efficiency-standards/2019-building-energy-efficiency

Information Sheet M-06 provides submittal instructions for the Title-24 installation, verification, and acceptance energy certificates. M-06 may be found on the SFDBI website at http://sfdbi.org/information-sheets

Energy Inspection Services
1660 Mission Street– San Francisco CA 94103
Office (415) 558-6132 – FAX (415) 558-6474 – www.sfgov.org/dbi (website) Revised 1/23/2020

Attachment RP

TITLE-24 LOW-RISE RESIDENTIAL ENERGY INSPECTION (PLUMBING)

A COPY OF THIS DOCUMENT SHALL BE KEPT WITH THE APPROVED DRAWING SET

JOB ADDRESS 763 LAKEVIEW AVE. APPLICATION NO. 202206035607 ADDENDUM NO. ____

ENGINEER/ARCHITECT NAME JANELLE VARGAS PHONE NO. 620 - 655 - 8299

Ensuring the completion of installation documentation as well as the required acceptance/verification testing is the direct responsibility of the undersigned. Installation documentation must be completed by the contractor performing the installation. Verification testing must be completed by a certified HERS rater.

In accordance with the requirements of the 2019 California Energy Code, the following documentation is required for the **plumbing** work in this project:

1. Installation

Plumbing
- ☐ CF2R-PLB-01-E DHW Non-HERS - Multifamily Central Hot Water System Distribution **(IP6)**
- ☐ CF2R-PLB-02-E DHW Non-HERS - Single Dwelling Unit Hot Water System Distribution **(IP5)**
- ☐ CF2R-PLB-03-E DHW Non-HERS - Pool and Spa Heating System **(IP7)**
- ☐ CF2R-PLB-21-H DHW HERS - HERS Multifamily Central Hot Water System Distribution **(IP9)**
- ☒ CF2R-PLB-22-H DHW HERS - HERS Single Dwelling Unit Hot Water System Distribution **(IP8)**

Solar
- ☐ CF2R-STH-01-E Solar Water Heating System **(IP1)**

Mechanical
- ☐ CF2R-MCH-04-E Non HERS – Evaporative coolers **(IP2)**

2. Verification
- ☐ CF3R-PLB-21-H DHW HERS - HERS Multifamily Central Hot Water System Distribution **(VP2)**
- ☐ CF3R-PLB-22-H DHW HERS - HERS Single Dwelling Unit Hot Water System Distribution **(VP3)**

Required information:

Prepared by: _____ **Date:** 10 - 24 - 2022
Engineer/Architect of Record Signature

Fax: _____ **Email:** janelle@akdhomes.net

Review by: _____ Phone: (415) 558-
DBI Engineer or Plan Checker

APPROVAL (Based on submitted reports)

DATE DBI Plumbing Inspector or Energy Inspection Services Staff

QUESTIONS ABOUT TITLE-24 ENERGY INSPECTION SHOULD BE DIRECTED TO:
Energy Inspection Services (415) 558-6132; or, dbi.energyinspections@sfgov.org ; or FAX (415) 558-6474

Revised 1/23/2020

City and County of San Francisco
Department of Building Inspection

London N. Breed, Mayor
Tom C. Hui, S.E., C.B.O., Director

Attachment RE

NOTICE

TITLE-24 LOW-RISE RESIDENTIAL ENERGY INSPECTION REQUIREMENTS (ELECTRICAL)

Please note that Certificates of Installation and/or Acceptance and/or Verification are required for this project, as indicated on this form issued with this permit. Ensuring the accurate completion of this documentation is the direct responsibility of the engineer/architect of record. This documentation is required *in addition to* the called inspections performed by the Department of Building Inspection.

For questions regarding the details or extent of required documentation or testing, and if there are any field problems regarding documentation or testing, please call your District Building Inspector or 415-558-6570.

Before final building inspection is scheduled, documentation of energy compliance "Certificate of Installation, Acceptance, and Verification" must be completed and signed by the responsible person in charge. ***The permit will not be finalized without compliance with the energy inspection requirements.***

Energy Inspection Services Contact Information

1. **Telephone: (415) 558-6132**
2. **Fax: (415) 558-6474**
3. **Email: dbi.energyinspections@sfgov.org**
4. **In person: 3rd floor at 1660 Mission St.**

Note: We are moving towards a 'paperless' mode of operation. All special inspection submittals, including final letters, may be emailed (preferred) or faxed. We will also be shifting to a paperless fax receipt mode.

Installation, Acceptance, and Verification certificates can be found on the California Energy Commission website at https://www.energy.ca.gov/programs-and-topics/programs/building-energy-efficiency-standards/2019-building-energy-efficiency

Information Sheet M-06 provides submittal instructions for the Title-24 installation, verification, and acceptance energy certificates. M-06 may be found on the SFDBI website at http://sfdbi.org/information-sheets.

Energy Inspection Services
1660 Mission Street– San Francisco CA 94103
Office (415) 558-6132 – FAX (415) 558-6474 – www.sfgov.org/dbi (website) Revised 1/23/2020

Attachment RE

TITLE-24 LOW-RISE RESIDENTIAL ENERGY INSPECTION (ELECTRICAL)

A COPY OF THIS DOCUMENT SHALL BE KEPT WITH THE APPROVED DRAWING SET

JOB ADDRESS 763 LAKEVIEW AVE. APPLICATION NO. 202206035607 ADDENDUM NO. ____

ENGINEER/ARCHITECT NAME JANELLE VARGAS PHONE NO. 620 - 655 - 8299

Ensuring the completion of installation documentation as well as the required acceptance/verification testing is the direct responsibility of the undersigned. Installation documentation must be completed by the contractor performing the installation. Verification testing must be completed by a certified HERS rater.

In accordance with the requirements of the 2019 California Energy Code, the following documentation is required for the **electrical** elements in this project:

1. Installation

Electrical
- ☒ CF2R-LTG-01-E Lighting – Single Family Dwellings **(IE1)**
- ☐ CF2R-LTG-02-E Lighting – Multi-Family Dwellings **(IE2)**

Solar
- ☐ CF2R-PVB-01-E Photovoltaic Systems **(IE18)**
- ☐ CF2R-PVB-02-E Battery Storage Systems **(IE19)**

Required information:

Prepared by: _____ **Date:** 10 - 24 - 2022
Engineer/Architect of Record Signature

Fax: _____ **Email:** janelle@akdhomes.net

Review by: _____ Phone: (415) 558-
DBI Engineer or Plan Checker

APPROVAL (Based on submitted reports)

DATE DBI Electrical Inspector or Energy Inspection Services Staff

QUESTIONS ABOUT TITLE-24 ENERGY INSPECTION SHOULD BE DIRECTED TO:
Energy Inspection Services (415) 558-6132; or, dbi.energyinspections@sfgov.org ; or FAX (415) 558-6474

Revised 1/23/2020

City and County of San Francisco
Department of Building Inspection

London N. Breed, Mayor
Tom C. Hui, S.E., C.B.O., Director

Attachment RB

NOTICE

TITLE-24 LOW-RISE RESIDENTIAL ENERGY/GREEN INSPECTION REQUIREMENTS (BUILDING)

Please note that Certificates of Installation and/or Acceptance and/or Verification are required for this project, as indicated on this form issued with this permit. Ensuring the accurate completion of this documentation is the direct responsibility of the engineer/architect of record. This documentation is required *in addition to* the called inspections performed by the Department of Building Inspection.

For questions regarding the details or extent of required documentation or testing, and if there are any field problems regarding documentation or testing, please call your District Building Inspector or 415-558-6570.

Before final building inspection is scheduled, documentation of energy compliance "Certificate of Installation, Acceptance, and Verification" and green building "Attachment E" must be completed and signed by the responsible person in charge. ***The permit will not be finalized without compliance with the energy inspection requirements.***

Energy Inspection Services Contact Information

1. **Telephone: (415) 558-6132**
2. **Fax: (415) 558-6474**
3. **Email: dbi.energyinspections@sfgov.org**
4. **In person: 3rd floor at 1660 Mission St.**

Note: We are moving towards a 'paperless' mode of operation. All special inspection submittals, including final letters, may be emailed (preferred) or faxed. We will also be shifting to a paperless fax receipt mode.

Installation, Acceptance, and Verification certificates can be found on the California Energy Commission website at https://www.energy.ca.gov/programs-and-topics/programs/building-energy-efficiency-standards/2019-building-energy-efficiency

Information Sheet M-06 provides submittal instructions for the Title-24 installation, verification, and acceptance energy certificates and Green Building Attachment E. M-06 may be found on the SFDBI website at http://sfdbi.org/information-sheets

Energy Inspection Services
1660 Mission Street– San Francisco CA 94103
Office (415) 558-6132 – FAX (415) 558-6474 – www.sfgov.org/dbi (website) Revised 1/23/2020

Attachment RB

TITLE-24 LOW-RISE RESIDENTIAL ENERGY/GREEN INSPECTION (BUILDING)

A COPY OF THIS DOCUMENT SHALL BE KEPT WITH THE APPROVED DRAWING SET

JOB ADDRESS 763 LAKEVIEW AVE. APPLICATION NO. 202206035607 ADDENDUM NO. ____

ENGINEER/ARCHITECT NAME JANELLE VARGAS PHONE NO. 620 - 655 - 8299

Ensuring the completion of installation documentation as well as the required acceptance/verification testing is the direct responsibility of the undersigned. Installation documentation must be completed by the contractor performing the installation. Verification testing must be completed by a certified HERS rater. Green Building Attachment E shall be completed as per Administrative Bulletin 093 (AB-093).

In accordance with the requirements of the 2019 California Energy Code, 2019 SFGBC and AB-093, the following documentation is required for the **building** elements in this project:

1. Installation

Addition and Alternation
- ☐ CF2R-ADD-02-E Non HERS – Prescriptive Additions Simple **(IB53)**
- ☐ CF2R-ALT-05-E Non HERS – Prescriptive Alterations Simple **(IB54)**

Envelope
- ☐ CF2R ENV-01-E Non HERS – Fenestration Installation **(IB1)**
- ☐ CF2R ENV-03-E Non HERS – Insulation Installation **(IB3)**
- ☐ CF2R ENV-04-E Non HERS – Roofing-Radiant Barrier **(IB4)**
- ☒ CF2R ENV-20-H HERS – Building Envelope Air Leakage Test **(IB56)**
- ☒ CF2R-ENV-21-H HERS – Quality Insulation Installation (QII) - Framing Stage **(IB64)**
- ☒ CF2R-ENV-22-H HERS – Quality Insulation Installation (QII) - Insulation Stage **(IB65)**

Solar Ready
- ☐ CF2R-SRA-01-E – Solar Ready Buildings – New Constructions **(IB68)**
- ☐ CF2R-SRA-02-E – Minimum Solar Zone Area Worksheet – New Constructions **(IB69)**

Mechanical
- ☐ CF2R-MCH-01-E Non HERS – Space Conditioning Systems **(IB57)**
- ☐ CF2R-MCH-02-E Non HERS – Whole house fan **(IB13)**
- ☒ CF2R-MCH-20-H HERS – Duct Leakage **(IB58)**
- ☒ CF2R-MCH-21-H HERS – Duct Location **(IB18)**
- ☒ CF2R-MCH-22-H HERS – Space Conditioning System Fan Efficacy **(IB59)**
- ☒ CF2R-MCH-23-H HERS – Space Conditioning System Airflow Rate **(IB60)**
- ☒ CF2R-MCH-24-H HERS – Building Envelope Air Leakage Worksheet **(IB61)**
- ☒ CF2R-MCH-25-H HERS – Refrigerant Charge Verification **(IB62)**
- ☐ CF2R-MCH-25f-E Non HERS – Refrigerant Charge Verification - New Package Unit with Factory Charge **(IB26)**
- ☒ CF2R-MCH-26-H HERS – Verified EER or SEER **(IB27)**
- ☒ CF2R-MCH-27-H HERS – IAQ **(IB63)**
- ☐ CF2R-MCH-28-H HERS – Return Duct Design and Air Filter Grille Device Sizing According to Tables 150.0-B or C **(IB31)**
- ☒ CF2R-MCH-29-H HERS – Duct Surface Area Reduction; R-Value; Buried Ducts Compliance Credit **(IB32)**
- ☐ CF2R-MCH-30-E HERS – Ventilation Cooling Compliance Credit **(IB55)**
- ☒ CF2R-MCH-31-H HERS – Whole house fan **(IB66)**
- ☒ CF2R-MCH-32-H HERS – Local Mechanical Exhaust **(IB67)**

2. Verification

Existing Conditions
- ☐ CF3R EXC-20-H HERS – HERS Verification of Existing Conditions for Residential Alterations **(VB47)**

Envelope
- ☐ CF3R ENV-20-H HERS – Building Envelope Air Leakage Test **(VB48)**
- ☐ CF3R-ENV-21-H HERS – Quality Insulation Installation (QII) - Framing Stage **(VB56)**
- ☐ CF3R-ENV-22-H HERS – Quality Insulation Installation (QII) - Insulation Stage **(VB57)**

Mechanical
- ☐ CF3R-MCH-20-H HERS – Duct Leakage Test **(VB49)**
- ☐ CF3R-MCH-21-H HERS – Duct Location **(VB12)**
- ☐ CF3R-MCH-22-H HERS – Space Conditioning System Fan Efficacy **(VB50)**
- ☐ CF3R-MCH-23-H HERS – Space Conditioning System Airflow Rate **(VB51)**
- ☐ CF3R-MCH-24-H HERS – Building Envelope Air Leakage Worksheet **(VB52)**
- ☐ CF3R-MCH-25-H HERS – Refrigerant Charge Verification **(VB53)**
- ☐ CF3R-MCH-26-H HERS – Verified EER or SEER **(VB21)**
- ☐ CF3R-MCH-27-H HERS – IAQ **(VB54)**
- ☐ CF3R-MCH-28-H HERS – Return Duct Design and Air Filter Grille Device Sizing According to Tables 150.0-B or C **(VB25)**
- ☐ CF3R-MCH-29-H HERS – Duct Surface Area Reduction; R-Value; Buried Ducts Compliance Credit **(VB27)**
- ☐ CF3R-MCH-30-H HERS – Ventilation Cooling Compliance Credit **(VB60)**
- ☐ CF3R-MCH-31-H HERS – Whole house fan **(VB58)**
- ☐ CF3R-MCH-32-H HERS – Local Mechanical Exhaust **(VB59)**

3. Green Building (For New Construction and Major Alterations)
- ☐ Green Building Attachment E **(GBC1)**

Required information:

Prepared by: _____ **Date:** 10 - 24 - 2022
Engineer/Architect of Record Signature

Fax: _____ **Email:** janelle@akdhomes.net

Review by: _____ Phone (415) 558-
DBI Engineer or Plan Checker

APPROVAL (Based on submitted reports)

DATE DBI Building Inspector or Energy Inspection Services Staff

QUESTIONS ABOUT TITLE-24 ENERGY INSPECTION SHOULD BE DIRECTED TO:
Energy Inspection Services (415) 558-6132; or, dbi.energyinspections@sfgov.org ; or FAX (415) 558-6474

Revised 1/23/2020

City and County of San Francisco
Department of Building Inspection

London N. Breed, Mayor
Tom C. Hui, S.E., C.B.O., Director

INFORMATION SHEET

NO. M-03

DATE : January 23, 2020

SUBJECT : Mechanical (and Electrical & Plumbing)

TITLE : **2019 Title-24 Energy/Green Forms for Low-rise Residential Buildings**

PURPOSE : The purpose of this Information Sheet is to provide Title-24 energy inspection forms for low-rise residential buildings based on the 2019 California Energy Code (CEC) and green building compliance per 2019 San Francisco Green Building Code (SFGBC) and Administrative Bulletin 093 (AB-093).

REFERENCE : 2019 California Energy Code
2019 San Francisco Green Building Code
Administrative Bulletin 093 (AB-093)
Information Sheet GB-01

DISCUSSION : The 2019 California Energy Code (CEC) will take effect on January 1, 2020. Additional and updated compliance, installation, and verification forms apply to the new Energy Code. Compliance with AB-093 Attachment E for new construction and major alterations.

2019 California Energy/Green Code Form Requirements for Low-Rise Residential

Low-Rise Residential Title-24 is comprised of Certificate of Compliance, Certificate of Installation, and Certificate of Verification forms. Compliance documentation of the AB-093 is comprised of Attachment E. The Low-Rise Residential Energy/Green Inspection forms are included in the following attachments.

Effective Date of the Provisions of this Information Sheet

The provisions of the Title-24 energy inspection forms become effective for building permit applications submitted on or after January 1, 2020. The provisions of the AB-093 Attachment E form is required for new construction and major alteration permits that have a final certificate of occupancy after January 1, 2019.

Note: Refer to GB-01, Attachment H for projects required to exceed energy standards per San Francisco Green Building Code.

Tom C. Hui, S.E., C.B.O., Director
Department of Building Inspection

1/21/2020
Date

Attachment RB: Title-24 Energy/Green Inspection Reqts Low-Rise Residential (Building)
Attachment RE: Title-24 Energy Inspection Reqts Low-Rise Residential (Electrical)
Attachment RP: Title-24 Energy Inspection Reqts Low-Rise Residential (Plumbing)

This Information Sheet is subject to modification at any time. For the most current version, visit our website at http://www.sfdbi.org

Energy Inspection Services
1660 Mission Street– San Francisco CA 94103
Office (415) 558-6132 – FAX (415) 558-6474 – www.sfgov.org/dbi (website) Revised 1/23/2020

NEW ATTACHED ADU
STUDIO MODULE
(763B LAKEVIEW AVE.)

763 LAKEVIEW AVE.
SAN FRANCISCO, CA 94112

AKD homes

ACCESSORY DWELLING UNITS

WWW.AKDHOMES.COM
EMAIL: DESIGN@AKDHOMES.NET
TEL: 510-314-0564

ISSUANCES

No.	Description	Date

Designed By: Janelle Vargas

M-03 Energy Inspection Checklist

APPROVED
Dept. of Building Insp.
-San Francisco-
08/06/2024

Drawing Scale:

Job No. PLANS

A-0.4

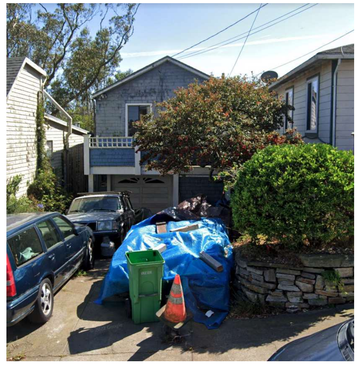

765 LAKEVIEW AVE. FRONT FACADE

765 LAKEVIEW AVE. BACK FACADE

759 LAKEVIEW AVE. BACK FACADE

759 LAKEVIEW AVE. FRONT FACADE

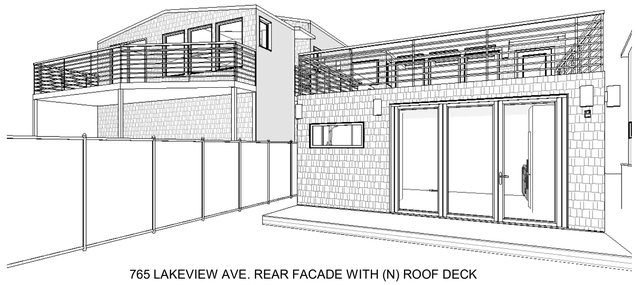

765 LAKEVIEW AVE. REAR FACADE WITH (N) ROOF DECK

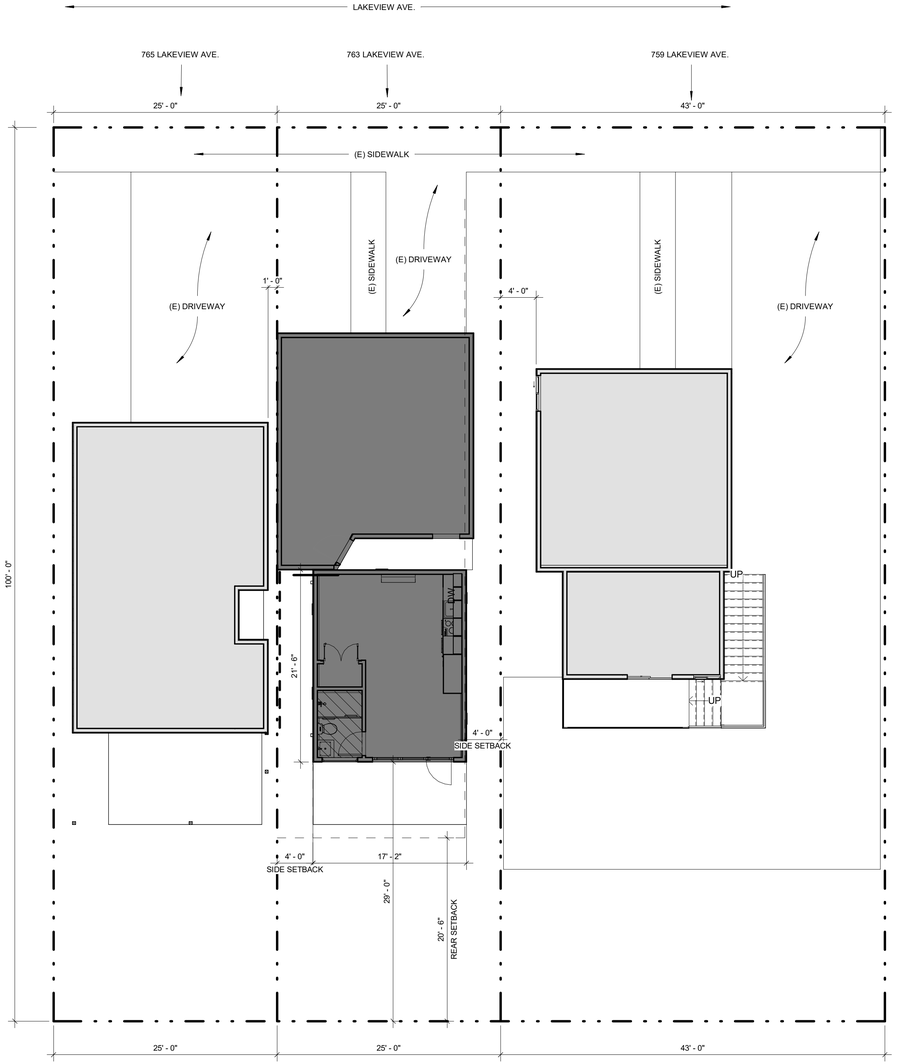

1 PROPOSED SITE PLAN Copy 1
1/8" = 1'-0"

759 LAKEVIEW AVE. REAR FACADE WITH (N) ROOF DECK

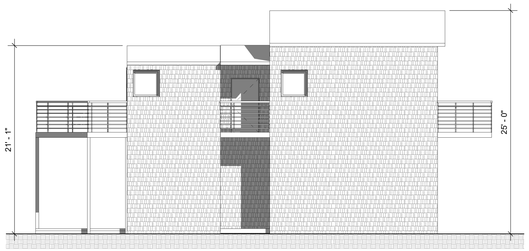

4 SIDE ELEVATION OF 765 LAKEVIEW
1/8" = 1'-0"

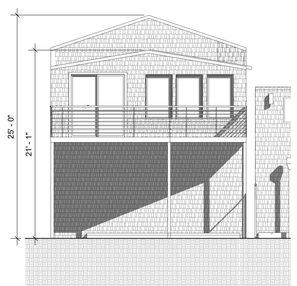

5 REAR ELEVATION OF 765 LAKEVIEW
1/8" = 1'-0"

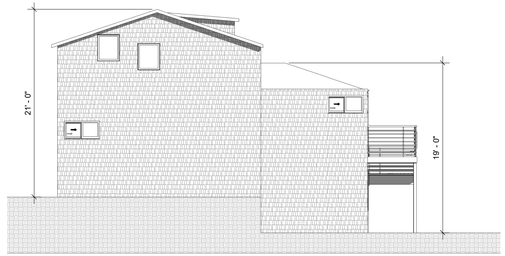

2 SIDE ELEVATION OF 759 LAKEVIEW
1/8" = 1'-0"

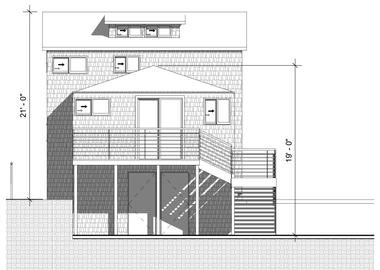

3 REAR ELEVATION OF 759 LAKEVIEW
1/8" = 1'-0"

NEW ATTACHED ADU
STUDIO MODULE
(763B LAKEVIEW AVE.)

763 LAKEVIEW AVE.
SAN FRANCISCO, CA 94112

AKD homes
ACCESSORY DWELLING UNITS
WWW.AKDHOMES.COM
EMAIL: DESIGN@AKDHOMES.NET
TEL: 510-314-0564

ISSUANCES

No.	Description	Date

Designed By: Janelle Vargas

email: jburnett@dlsenodesign.net phone: 620-655-8299

ADJACENT BUILDINGS

APPROVED
Dept. of Building Insp.
-San Francisco-
08/06/2024

Drawing Scale: 1/8" = 1'-0"

Job No. PLANS

A-0.5

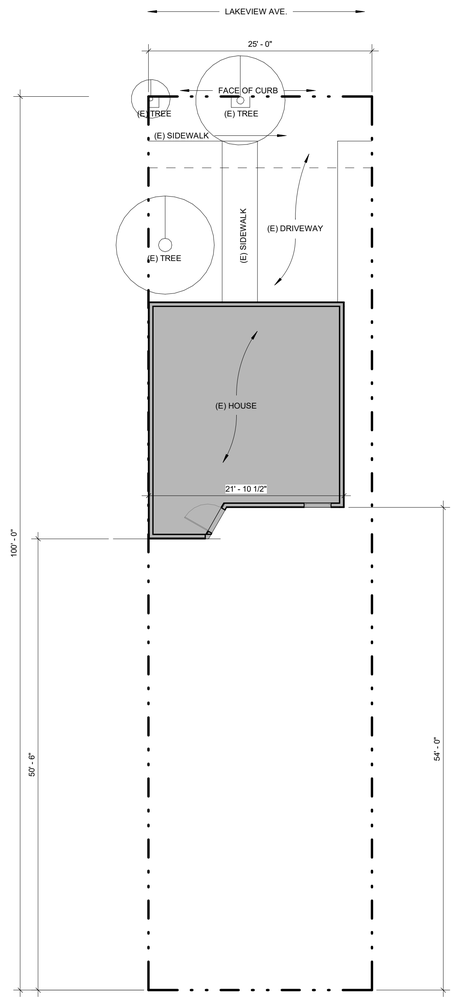

2 EXISTING SITE PLAN
1/8" = 1'-0"

KEYNOTES

1. ROOF OVERHANG, ABOVE
2. ALL DOWNSPOUTS TO DISCHARGE ON SPLASH BLOCK
3. ALL EXTERIOR LANDINGS AT EXTERIOR DOORS SHALL NOT BE MORE THAN 7.75" BELOW THE TOP OF THE DOOR THRESHOLD. 2019 CRC R311.3.2
4. ALL STEPS SHALL HAVE A MAXIMUM RISE OF 7.75" AND MINIMUM RUN OF 10". 2019 CRC R 311.7.4
5. FOUNDATION VENTS
6. CRAWL SPACE ACCESS - MIN 18"X24" 2019 CRC 408.4
7. MIN 3" THICK CONCRETE PAD FOR A/C CONDENSER. UNIT TO BE ANCHORED TO PAD
8. MINI SPLIT SYSTEM - HEAT PUMP ON ROOF
9. KITCHEN HOOD - SEE SHEET A-8.2. HOOD SPECIFIED IS 600 CFM (MIN 100 CFM REQUIRED) WITH 6" DUCT TERMINATED AT ROOF. SHALL BE MIN 3'-0" FROM ANY OPENING INTO BUILDING.
10. WASHER/ DRYER (VENTLESS) DOOR TO LAUNDRY CLOSET SHALL BE LOUVERED TO PROVIDE AN AREA OF NO LESS THAN 100 SQUARE 1 INCHES (0.0645 M2) FOR MAKE UP AIR. IN ACCORDANCE WITH THE APPLIANCE MANUFACTURER'S INSTALLATION INSTRUCTIONS AND 2019 CMC.

BATHROOM NOTES:

11. 1. ALL SHOWER AND BATHTUB SPACES WITH AN INSTALLED SHOWER HEAD TO BE FINISHED WITH A NON ABSORBENT SURFACE EXTEND NOT LESS THAN 6 FEET ABOVE THE FLOOR. CBC 1219; CRC SEC R307.2 TYP.

2. ALL SHOWER AND TUB-SHOWER COMBINATIONS SHALL BE PROVIDED WITH INDIVIDUAL CONTROL VALVES FOR PRESSURE BALANCE OR THERMOSTATIC MIXING VALVE TYPE. CPC SEC. 418.0

3. ALL TILE AND STONE SLABS AT BATHTUBS, SHOWER AND AREAS EXPOSED TO DIRECT WATER OR CONTINUOUS HUMIDITY SHALL BE INSTALLED WITH MORTAR ON FIBER CEMENT BOARDS, TYP. GREEN BOARD SHALL NOT BE USED AT SAID LOCATIONS,CRC SEC.702.3.8.1 (5 / A-0.5)

4. ALL BATHROOM FLOORS WITH TILE FLOORING SHALL BE RECESSED, SEE PAGE A-7.2 SYMBOL HATCH FOR RECESSED FLOORS

5. SHOWER AREAS SHALL HAVE A CLEAR INTERIOR FINISH AREA OF 1,024 SQ. IN. AND BE ABLE TO ACCOMMODATE A MINIMUM 30" CIRCLE AT THE THRESHOLD LEVEL. THESE CLEARANCES SHALL BE MAINTAINED UP TO A HEIGHT OF 70" ABOVE SHOWER DRAIN PER CPC Section 411.7.

6. ALL SHOWER ENCLOSURE DOORS SHALL SWING OUT OF THE SHOWER STALL

12. SOAP NICHE

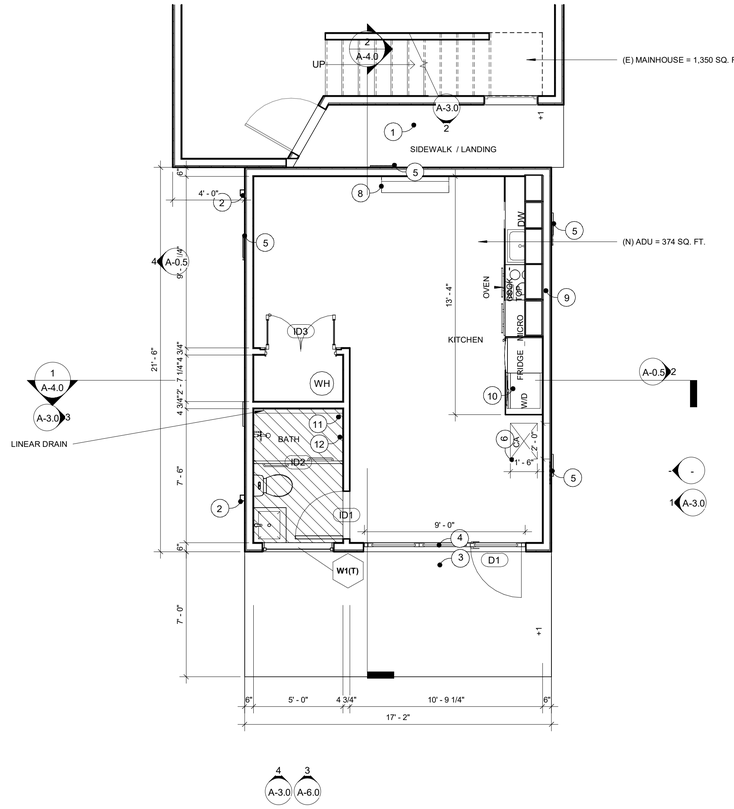

1 PROPOSED FLOOR PLAN
1/4" = 1'-0"

NOTE 1: UNDER FLOOR DUCTS, IF ANY, SHALL HAVE CLEARANCES TO EARTH AND NOT PASS THROUGH MINIMUM REQUIRED ACCESS CRAWL SPACE POINTS.

NOTE 2: THE PRESCRIPTIVE FAN DUCT SIZING REQUIREMENTS FOR AIR FLOW (PER ASHRAE 62.2-2010) SHALL COMPLY WITH TABLE 7.1 BELOW OR COMPLY WITH MANUFACTURER'S DESIGN CRITERIA FOR SYSTEMS WITH AIRFLOW GREATER THAN 125 CFM AT 0.25 OF WATER COLUMN STATIC PRESSURE.

NOTE: PLASTIC PLUMBING PIPE SHALL NOT BE USED FOR THE DOMESTIC WATER SUPPLY OR SANITARY WASTE SYSTEM WITHIN THE BUILDING" (DCMC 15.20.120)

PLUMBING FIXTURES SHALL NOT EXCEED THE FOLLOWING USAGE LIMITS: MAXIMUM WATER FACTOR EQUAL TO OR LESS THAN 6.0 FOR CLOTHES WASHERS (DCMC 15.20.080) MAXIMUM 6.5 GALLONS PER CYCLE OR BE ENERGY STAR QUALIFIED FOR NEW DISHWASHERS (DCMC 15.20.080)

SEISMICALLY STRAP THE WATER HEATER WITH TWO STRAPS (ONE 1/3 DOWN FROM THE TOP OF THE TANK AND ONE STRAP 4" ABOVE THE CONTROLS) CPC 507.2

NOTE: PROVIDE 2 COPIES OF A COMPLETED PRESCRIPTIVE ADDITIONS FORM 2019-CF-2R-ADD-02-E AT "FINAL INSPECTION", PREPARED BY CONTRACTOR - CERTIFYING THE INSTALLATION ALL MANDATORY BUILDING COMPONENTS ARE IN CONFORMANCE WITH CALIFORNIA ENERGY REGULATION.

TEMPORARY NFRC LABELS ON NEW WINDOWS AND EXTERIOR DOORS SHALL NOT BE REMOVED BEFORE INSPECTION BY ENFORCEMENT AUTHORITY (CENC110.6.5A).

THE FOLLOWING OPENINGS SHALL BE CAULKED, GASKETED, WEATHER STRIPPED OR OTHERWISE SEALED: 1. EXTERIOR JOINTS AROUND WINDOW AND DOOR FRAMES, INCLUDING DOORS BETWEEN THE HOUSE AND GARAGE, BETWEEN INTERIOR HVAC CLOSETS AND CONDITIONED SPACE, BETWEEN ATTIC ACCESS AND CONDITIONED SPACE, BETWEEN WALL SOLE PLATES AND THE FLOOR, EXTERIOR PANELS AND ALL SIDING MATERIALS (CENC110.7). 2. OPENINGS FOR PLUMBING, ELECTRICITY, AND GAS LINES IN EXTERIOR AND INTERIOR WALLS, CEILINGS, AND FLOORS (CENC110.7).

LEGEND

▪▪▪▪▪▪▪ FOUNDATION VENT

CRAWL SPACE AREA VENTILATION CALCULATION:
MASTER FLOW FOUNDATION VENT BLOCK STYLE 15 3/8" X 8" GALVANIZED STEEL FOUNDATION VENT =
73 SQ. IN. OF NET FREE VENTILATION AREA

SEE SPECS ON 2/A-8.0

PROPOSED CRAWLSPACE AREA: 374 SQ. FT.

374 / 150 = 2.5 (SQ. FT.) X 144 = 360 SQ. IN. FREE AREA REQ'D.

360 / 73 = 4.9 (5 TOTAL VENTS REQ'D)

5 FOUNDATION VENTS X 73 SQ. IN. = 365 SQ. IN.
(SEE ELEVATIONS AND PLAN FOR LOCATION)

360 SQ. IN. > 365 SQ. IN. = OK

NOTES:

1.OPENING UNDER FLOOR ARE REQUIRES A MINIMUM OF ONE SQUARE FOOT OF VENTILATION FOR EACH 150 SQUARE FOOT OF UNDER FLOOR SPACE

2. OPENINGS ARE REQUIRED TO BE SPACED SO AS TO PROVIDE CROSS VENTILATION OF THE UNDER FLOOR SPACE

3. VENTILATION OPENINGS SHALL BE WITHIN 3 FEET OF EACH CORNER OF THE BUILDING CRC 2019 SEC R408.1 - SEE FLOOR PLAN FOR LOCATION

4. THERE ARE SIX DIFFERENT OPTIONS FOR OPENING COVERINGS: PERFORATED SHEET METAL PLATES, EXPANDED SHEET METAL PLATES, CAST IRON GRILLES, EXTRUDED LOAD BEARING VENTS, HARDWARE CLOTH AND CORROSION RESISTANT WIRE MESH ARE ACCEPTABLE MATERIALS CRC R2019 SEC. R408.2

5. CONTRACTOR SHALL BE RESPONSIBLE TO INSTALL FOUNDATION VENTS PER MANUFACTURER SPECIFICATIONS.

6. CONTRACTOR SHALL CONFIRM NUMER AND LOCATION OF VENTS ON-SITE AND COORDINATE PLACEMENT AS TO NOT BE PLACED IN CLOSE PROXIMITY TO STRUCTURAL ELEMENTS. IN CASES OF DISCREPANCY, CONTRATOR SHALL CONTACT DESIGNER AND PROJECT ENGINEER PRIOR INSTALLATION.

Prescriptive Duct Sizing Requirements (ASHRAE 62.2 Table 7.1)

Duct Type	Flex Duct				Smooth Duct			
Fan Rating (cfm @ 0.25 in w.c)	50	80	100	125	50	80	100	125
	Maximum Allowable Duct Length (ft)							
Diameter (in)	Flex Duct				Smooth Duct			
3	X	X	X	X	5	X	X	X
4	70	3	X	X	105	35	5	X
5	NL	70	35	20	NL	135	85	55
6	NL	NL	125	95	NL	NL	NL	145
7 & above	NL	NL	NL	NL	NL	NL	NL	NL

This table assumes no elbows. Deduct 15 ft. of allowable duct length for each turn, elbow or fitting

NL	=	No limit on duct length of this diameter
X	=	Not allowed, any length of duct of this size with assumed turns, elbows, fittings will exceed the rated pressure drop.
w.c	=	Water column

NEW ATTACHED ADU
STUDIO MODULE
(763B LAKEVIEW AVE.)

763 LAKEVIEW AVE.
SAN FRANCISCO, CA 94112

AKD homes
ACCESSORY DWELLING UNITS

WWW.AKDHOMES.COM
EMAIL: DESIGN@AKDHOMES.NET
TEL: 510-374-0564

ISSUANCES

No.	Description	Date
1	PLANNING	5.16.22

Designed By: Janelle Vargas

email: jburnett@disenodesign.net phone: 620-655-8299

PROPOSED FLOOR PLAN

APPROVED
Dept. of Building Insp.
-San Francisco-
08/06/2024

Drawing Scale: As indicated

Job No. PLANS

A-1.0

Decking and Fascia Recommended Fasteners

If any condition occurs which is attributable to the use of non-recommended fasteners, such condition shall not be covered under the Trex Limited Warranty.

RECOMMENDED FASTENERS		Transcend®	Enhance® (scalloped profile)	Select®
	DECKING-HIDDEN FASTENERS			
	Trex Hideaway® Universal Hidden Fastener	x	x	x
	TigerClaw® TC-G Hidden Fastener	x	x	x
	Cortex® Concealed Fasteners*	x		x
	Starborn® Pro Plug® System for PVC & Composite (Epoxy Coated & Stainless) (2" are approved for sleeper & roof top applications only)	x		x
	Simpson Strong-Tie® Deck Drive™ DCU Composite Screw & DCU Screw Plugs (Handdrive only & must also use Auto-Set Drive Bit)	x		x
	DECKING-COMPOSITE SCREWS			
	FastenMaster® TrapEase 3 Ultimate Composite Deck Screw	x	x	x
	Simpson Strong-Tie® Deck-Drive™ DCU Composite Screw (Collated & Handdrive)	x	x	x
	Quik Drive® Composi-Lok Deck Screw	x	x	x
	SplitStop™ Titan III Composite Screw	x	x	x
	Starborn® Cap-Tor® xd Epoxy Coated & Headcote® Stainless (available collated for Muro CH7390 Driver**) (2" are approved for sleeper & roof top applications only)	x	x	x
	Screw Products C-Deck Exterior Star Drive Composite Deck Screw	x	x	x
	Phillips II Plus® Pozisquare	x	x	x
	Muro® T-Screw Torx Stainless Steel Screw - Collated (TX0212SFD or M-TX0300SEP)	x	x	x
	Kameleon™ GRKFasteners™			x

RECOMMENDED FASTENERS		Transcend	Enhance	Select
	FASCIA**			
	Cortex® Hidden Fastening System for Fascia	x	x	x
	Starborn® Pro Plug® System for Fascia – Epoxy Coated & Stainless	x	x	x
	Starborn® Deckfast® Fascia System – Epoxy Coated® & Headcote® Stainless	x	x	x
	SplitStop™ Fascia Screw	x	x	x
	Simpson Strong-Tie® Fascia Board Screw	x	x	x
	FastenMaster® TrapEase® Fascia Fastener	x	x	x

NOTES:

- Do not use any hidden fasteners that are plug based with Trex Enhance profiles with scalloped bottom.
- 2-3/4" or 3" screws can be used with Trex 2x6 product.
- Muro T-Screw M-TX0300SEP listed above is approved for 2x6 decking (can also be used with standard 1" (decking as listed above). This screw is collated and can be used with Muro Auto Feed Screw Gun FDVL41 Speed Driver. **(NOTE: THIS IS NOT A COLOR-MATCH SCREW.)**
- All decking products are approved for use with Trex Hideaway Hidden Fasteners, thus all decking products can be routed according to our instructions.
- Simpson Strong-Tie Deck Drive DCU Composite Screw in collated versions works with Quik Drive gun.
- * Not for use with sleeper systems. Refer to FastenMaster® literature for more information. Also, these are approved with Trex 2x6 decking profiles.
- ** Fascia system screws listed above **can only be used with composite fascia profiles**, and cannot be used with standard thickness decking boards used as fascia. Use stainless steel screws near water applications.
- Trex recommends the use of two screws per joist.
- All recommended screws are designed to be installed flush with decking surface. DO NOT countersink screws.
- Use recommended stainless steel screws in any areas near bodies of saltwater.

FastenMaster® TrapEase® 3 and Cortex® are registered trademarks of OMG, Inc.

Quik Drive® is a registered trademark and Composi-Lok™ is a trademark of Simpson Strong-Tie Company, Inc.

DeckFast® Cap-Tor® xd and HeadCote® Cap-Tor® xd are registered trademarks of Starborn Industries Inc.

C-Deck Exterior Star Deck Composite Deck Screw is a product of Screw Products Inc.

Phillips II Plus® is a registered trademark of Phillips Fasteners LLC. SplitStop™ screws are a registered trademark of Titan Metal Werks, Inc.

Minimum Fastener Size		
	SCREWS	
Profile	Length	No.
1x6	2-1/2" or 2-3/4"	#8, #10
2x6	2-3/4" or 3"	#8, #10

DECKING

TREX® DECKING & FASCIA

PROFILE	DESCRIPTION		ITEM NUMBER	COLORS
1" Square-Edge Board Actual dimensions: Transcend & Enhance: .94 in x 5.5 in x 12 ft / 16 ft / 20 ft (24 mm x 140 mm x 365 cm / 487 cm / 609 cm) Select: .82 in x 5.5 in x 12 ft / 16 ft / 20 ft (20 mm x 140 mm x 365 cm / 487 cm / 609 cm)	1 x 6 x 12' 1 x 6 x 16' 1 x 6 x 20'	Transcend Tropicals Transcend Tropicals Transcend Tropicals	XX010612TS01 XX010616TS01 XX010620TS01	IM, TT, HG, SR, LR
	1 x 6 x 12' 1 x 6 x 16' 1 x 6 x 20'	Transcend Earth Tones Transcend Earth Tones Transcend Earth Tones	XX010612T2S01 XX010616T2S01 XX010620T2S01	GP, RS, VL
	1 x 6 x 12' 1 x 6 x 16' 1 x 6 x 20'	Enhance Basics Enhance Basics Enhance Basics	XX010612E2S01 XX010616E2S01 XX010620E2S01	CS, BD, SD
	1 x 6 x 12' 1 x 6 x 16' 1 x 6 x 20'	Enhance Naturals Enhance Naturals Enhance Naturals	XX010612E2S01 XX010616E2S01 XX010620E2S01	FW, RH, TS, CB
	7/8 x 6 x 12' 7/8 x 6 x 16' 7/8 x 6 x 20'	Select Select Select	XX010612SS01 XX010616SS01 XX010620SS01	PG, WG, SD, WB, MB
1" Grooved-Edge Board Actual dimensions: Transcend & Enhance: .94 in x 5.5 in x 12 ft / 16 ft / 20 ft (24 mm x 140 mm x 365 cm / 487 cm / 609 cm) Select: .82 in x 5.5 in x 12 ft / 16 ft / 20 ft (20 mm x 140 mm x 365 cm / 487 cm / 609 cm)	1 x 6 x 12' 1 x 6 x 16' 1 x 6 x 20'	Transcend Tropicals Transcend Tropicals Transcend Tropicals	XX010612TG01 XX010616TG01 XX010620TG01	IM, TT, HG, SR, LR
	1 x 6 x 12' 1 x 6 x 16' 1 x 6 x 20'	Transcend Earth Tones Transcend Earth Tones Transcend Earth Tones	XX010612T2G01 XX010616T2G01 XX010620T2G01	GP, RS, VL
	1 x 6 x 12' 1 x 6 x 16' 1 x 6 x 20'	Enhance Basics Enhance Basics Enhance Basics	XX010612E2G01 XX010616E2G01 XX010620E2G01	CS, BD, SD
	1 x 6 x 12' 1 x 6 x 16' 1 x 6 x 20'	Enhance Naturals Enhance Naturals Enhance Naturals	XX010612E2G01 XX010616E2G01 XX010620E2G01	FW, RH, TS, CB
	7/8 x 6 x 12' 7/8 x 6 x 16' 7/8 x 6 x 20'	Select Select Select	XX010612SG01 XX010616SG01 XX010620SG01	PG, WG, SD, WB, MB
1" x 8" Fascia Actual dimensions: Transcend, Enhance, Select, Universal White: .56 in x 7.25 in x 12 ft (14 mm x 184 mm x 365 cm)	1 x 8 x 12' 1 x 8 x 12'	Transcend Tropicals Transcend Earth Tones	XX010812TS01 XX010812T2S01	IM, TT, HG, SR, LR GP, RS, VL
	1 x 8 x 12' 1 x 8 x 12'	Enhance Basics Enhance Naturals	XX010812E2S01 XX010812E2S01	CS, BD, SD FW, RH, TS, CB
	1 x 8 x 12' 1 x 8 x 12'	Select Universal White	XX010812SS01 WW010812ES01	PG, WG, SD, WB, MB WW
1" x 12" Fascia Actual dimensions: Transcend, Enhance, Select, Universal White: .56 in x 11.375 in x 12 ft (14 mm x 288 mm x 365 cm)	1 x 12 x 12' 1 x 12 x 12'	Transcend Tropicals Transcend Earth Tones	XX011212TS01 XX011212T2S01	IM, TT, HG, SR, LR GP, RS, VL
	1 x 12 x 12' 1 x 12 x 12'	Enhance Basics Enhance Naturals	XX011212E2S01 XX011212E2S01	CS, BD, SD FW, RH, TS, CB
	1 x 12 x 12' 1 x 12 x 12'	Select Universal White	XX011212SS01 WW011212ES01	PG, WG, SD, WB, MB WW
2" Square-Edge Board Actual dimensions: Transcend 2x4: 1.3 in x 3.4 in x 16 ft (33 mm x 86 mm x 487 cm) Transcend & Select 2x6: 1.3 in x 5.5 in x 12 ft / 16 ft / 20 ft (33 mm x 140 mm x 365 cm / 487 cm / 609 cm)	2 x 4 x 16'	Transcend Tropicals	XX020416TS01	IM, TT, HG, SR, LR
	2 x 6 x 12' 2 x 6 x 16' 2 x 6 x 20'	Transcend Tropicals Transcend Tropicals Transcend Tropicals	XX020612TS01 XX020616TS01 XX020620TS01	IM, TT, HG, SR, LR
	2 x 6 x 12' 2 x 6 x 16' 2 x 6 x 20'	Select Select Select	XX020612SS01 XX020616SS01 XX020620SS01	PG, SD, WB, MB

XX = COLOR PREFIX: IM Island Mist, TT Tiki Torch, HG Havana Gold, SR Spiced Rum, LR Lava Rock, GP Gravel Path, RS Rope Swing, VL Vintage Lantern, PG Pebble Grey, WG Winchester Grey, SD Saddle, WB Woodland Brown, MB Madeira, FW Foggy Wharf, RH Rocky Harbor, TS Toasted Sand, CB Coastal Bluff, CS Clam Shell, BD Beach Dune, SD Saddle, WW Wood Grain White

TREX HIDEAWAY® HIDDEN FASTENING SYSTEM	DESCRIPTION	ITEM NUMBER
Universal Starter Clip	400 sq. ft. (37 sq. m) bag	UNIVSTARTCLIP
Universal Fastener (glass-filled nylon)	50 sq. ft. (4.6 sq. m) box 500 sq. ft. (46.5 sq. m) bucket	UNIVCONCLIP DA00002
Router Bit	Router Bit	ROUTBIT

NOTE: Construction methods are always improving. Please refer to www.trex.com for the most up-to-date installation requirements.

DECKING

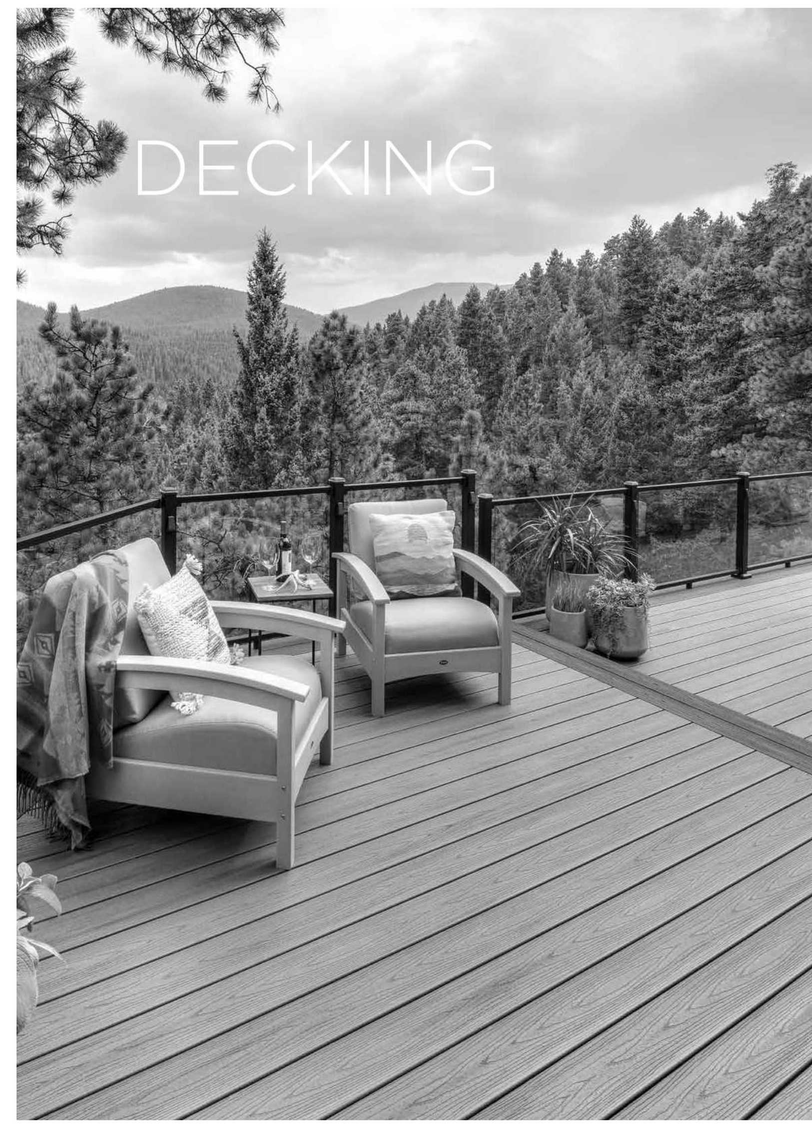

DECKING

Rooftop and Sleeper Deck Systems – Pressure-Treated Framing

A sleeper system is a substructure between a solid surface and Trex decking. Drainage, access, and airflow are critical. Water must be able to flow through and away from the deck. For repairs and removal of debris, joist system access may be necessary.

NOTE: English measurements are shown. Convert to metric measurements if necessary.

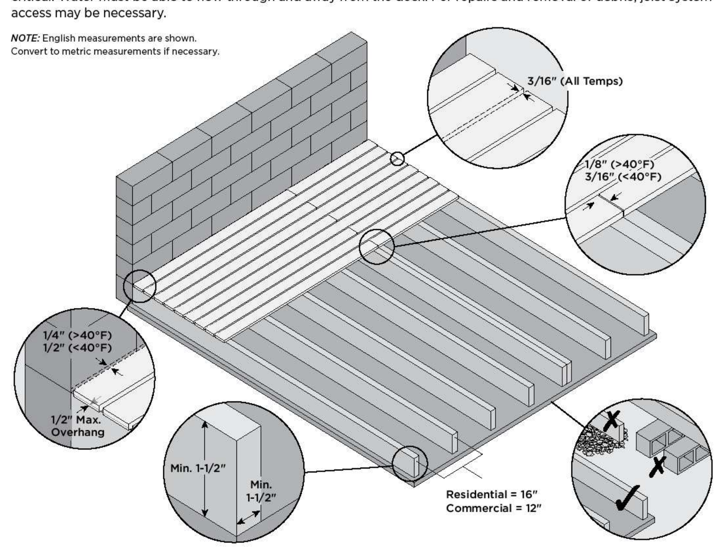

- It is recommended that building-code approved structural material be used as the supports.
- This system should not be allowed to float. It must be attached in a manner that secures the framing/system.
- The sleeper system must be level and have no uneven undulations. Any uneven areas of the substructure will transfer to the Trex decking, resulting in uneven decking.
- Trex, when used with a sleeper system, must be supported below its entire length. If using in a roofing application, the supports must run the direction of the pitch of the roof to facilitate proper drainage. Sleeper should be placed perpendicular to the deck board orientation.
- For commercial applications, consult a local building code official for specific requirements.
- If installing decking at an angle, decrease spans 4" (100 mm) for each of the above. (12" (305 mm) for residential and 8" (204 mm) for commercial.)
- For sleeper systems where small debris (pine needles, leaves, sand, dirt) can accumulate either between or under deck boards, a minimum of 1-1/2" (38mm) height is allowable. Trex recommends the use of Trex Universal Hidden Fasteners or 2" Starborn Cap-Tor® xd - Epoxy Coated screws. *NOTE:* Trex recommended composite decking screws are too long when using 1-1/2" (38 mm) height as this will penetrate through the sleeper. For areas with the potential for debris buildup, a minimum 3-1/2" (89 mm) or greater height is recommended to allow the debris to be removed along with the use of either Trex Universal Hidden fasteners or any Trex recommended screws.
- **Always** consult your local building code authority for proper details on roof and railing installation to the roof structure if required.
- Any deviation from these recommendations could result in voiding of the Trex warranty.

DECKING

NOTE: Construction methods are always improving. Please refer to www.trex.com for the most up-to-date installation requirements.

Framing and Fastening Tips

Fastening Tip for Trex Transcend, Trex Enhance, and Trex Select

NOTE: When using pneumatic or battery-operated equipment, adjust the pressure so that you only shoot the head of the screw to be flush with the board's cap. DO NOT shoot the fastener head completely through the shell.

Trex Products Near Low-E Windows

Low-E glass reflects more sunlight. It has been observed that the extra reflectivity, combined with any concavity in the glass, can act like a concave mirror. This mirror effect concentrates sunlight onto outdoor objects, including that of decking and railing. This can result in an extreme amount of heat concentrated on areas of the decking surface. This can sometimes char the decking surface or cause the decking to slightly bow.

In most cases, install fasteners at a 90° angle (perpendicular to the board).

At board ends on the deck's edge, you can install screws placed perpendicularly at the recommended distance, at minimum of 1" (25mm) from the board end and edge, without splitting the board.

For butt joints, where boards meet over a single joist, add a 2" x 4" "nailer" board at the butt joint. This allows screw-in at 90 degrees and allows fasteners to be used at end of each board.

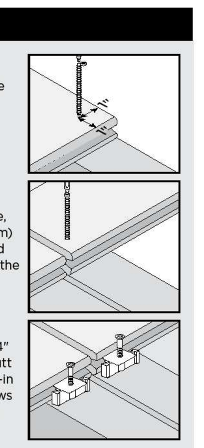

Clean Cut Boards

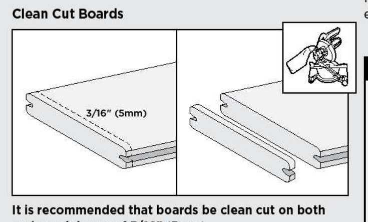

It is recommended that boards be clean cut on both ends a minimum of 3/16" (5mm).

Composite decking is a great alternative to traditional wood decking. When building your deck and railing, it is recommended that code-approved structural material be used as the framing and joists. Check your local building codes for restrictions. Trex decking cannot be used for structural applications. **Do not** attach Trex decking directly to any solid surface or watertight system.

Dock Applications

Trex decking contains no materials that will harm marine life and is safe for the environment. As long as dock is in intermittent contact with water, i.e., splashing and not in continuous direct contact with water, the durability of the Trex decking should not be affected.

For docks, a 3/8" (10mm) width-to-width gap between boards is recommended to allow for increased drainage due to increased contact with water. In addition, stainless steel fasteners should be used. If there is sufficient contact between the dock and gasoline, grounding of the dock is also recommended.

Special Patterns

When planning a unique pattern, you will need to adjust the framing to support the surface pattern. Many decks are designed to take advantage of angles, as shown below.

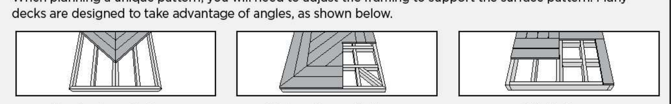

Herringbone Pattern — Picture Frame Pattern — Tile Pattern

DECKING

Trex® Fascia Installation Recommendations

Trex Fascia utilized around the perimeter of a deck must be gapped with the same requirements as Trex decking to allow for air flow and expansion/contraction of the fascia.

When Using Approved Fascia Fasteners:

NOTE: The fasteners listed below can only be used with 1x8 or 1x12 fascia product, and cannot be used with decking product that is being used as fascia trim or stair risers.

See previous page for Trex-recommended Fascia fasteners.

Always refer to manufacturing instructions first for installation methods. If instructions are not specific, refer to the diagram below. Always remember to gap fascia properly. A secondary glue is not required when using these fasteners.

NOTE: Instructions below reflect the use of Trex-recommended fascia fasteners. If using deck boards as fascia, refer to the recommendations in next column on this page.

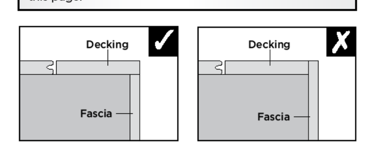

Install fascia **UNDER** decking edges/ends. This will provide protection to the fascia/framing seam as well as optimize the aesthetics of the installation.

Do Not install fascia in the method shown here. The fascia board must be attached fully to the rim joist and cannot run parallel to the decking surface.

TIPS:

- 10" rim joists (represented below unless noted) allow for an easier and more aesthetically pleasing installation.

If Using Other Fasteners and/or Using Decking Product in Fascia/Stair Riser Applications:

While Trex prefers the previous methods of attachment, as these are the very best options, there are also other recommendations that can be followed for fascia or deck boards being used for fascia. Use three Trex recommended composite decking screws every 12". *ALWAYS refer to manufacturer instructions to ensure that recommended screws can be used for fascia applications.* The top screw should be placed 1" from the top of the rim joist, the second screw in the center of the rim joist, and the third screw 1" from the bottom of the rim joist.

IN ADDITION, also use a weather-resistant, construction-grade adhesive (adhesives that work with wood will work with Trex products) as a **SECONDARY fastener when attaching fascia. *Remember to wipe away any excess before it dries or is allowed to drip on other Trex surfaces.*

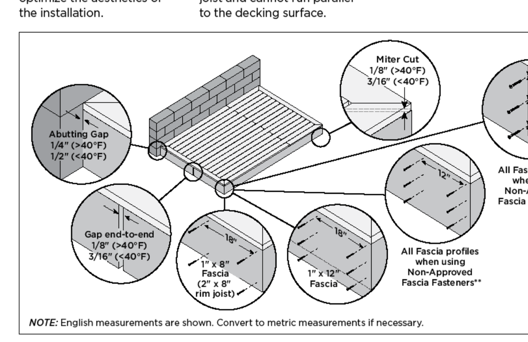

NOTE: English measurements are shown. Convert to metric measurements if necessary.

DECKING

NOTE: Construction methods are always improving. Please refer to www.trex.com for the most up-to-date installation requirements.

Code Compliance

Joist Spanning for Decking

Trex decking meets all applicable national model building codes. The joists must be spaced on center according to the chart below. Be sure that joists are level and plumb. Trex decking must span at least three joists. For heavy items such as hot tubs, planters, etc., consult a local building engineer or inspector for span recommendations. If you want to minimize the appearance of joists through the spaces between boards, paint the top of your joists black.

Code Listings

Trex complies with major model building codes and has been evaluated by the International Code Council evaluation service.

For a Safety Data Sheets (SDS), please visit ***www.trex.com.***

Adjust Joist Spanning to Accommodate Angled Decking Patterns

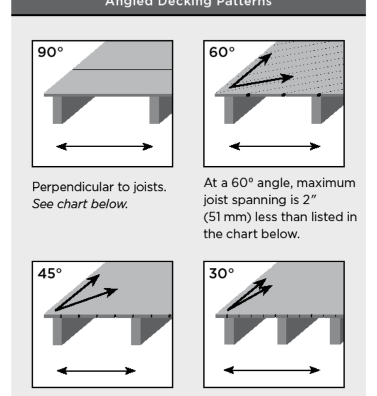

Perpendicular to joists. *See chart below.*

At a 60° angle, maximum joist spanning is 2" (51 mm) less than listed in the chart below.

At a 45° angle, maximum joist spanning is 4" (102 mm) less than listed in the chart below.

At a 30° angle, maximum joist spanning is 1/2 of the distance listed in the chart below.

Trex Decking Span Chart (on center)	Residential Decks, Light Duty Docks, Residential/Day Care Playground	Commercial Decks, Boardwalks and Marinas	
Decking Loading	100 psf = 4.8 kN/m2	100 psf = 4.8 kN/m2	200 psf = 9.5 kN/m2
1" (25 mm) Boards, and .875" (22 mm) Select Boards	16" (406 mm)	16" (406 mm)	12" (305 mm)
2" x 6" (51 mm x 152 mm) Boards	24" (610 mm)	24" (610 mm)	16" (406 mm)

Trex Railing Span Chart	Maximum Railing Span for all Applications
Transcend, Select railing, and Trex Signature railing	96" on center (2438 mm) for Transcend, 72" on center (1829 mm) for Select, 96" (2438 mm) clear span for Trex Signature

DECKING

NOTE: Construction methods are always improving. Please refer to www.trex.com for the most up-to-date installation requirements.

Metal Framing Requirements and Gapping

NOTE: Metric measurements are shown. Convert to US measurements if necessary.

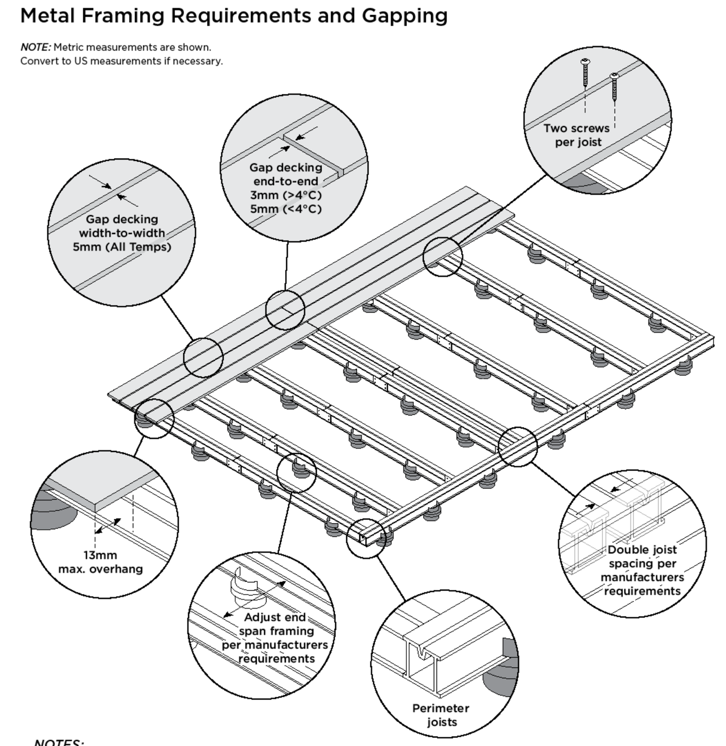

NOTES:

- When using an aluminum framing system or other type of metal for sleeper systems, follow manufacturer's instructions for proper installation.
- Depending on type of structure being used, different types of fasteners must be used for attachment.
- When using screws to attach decking to framing, use two screws per every joist.

DECKING

2 DECK MATERIAL
1/4" = 1'-0"

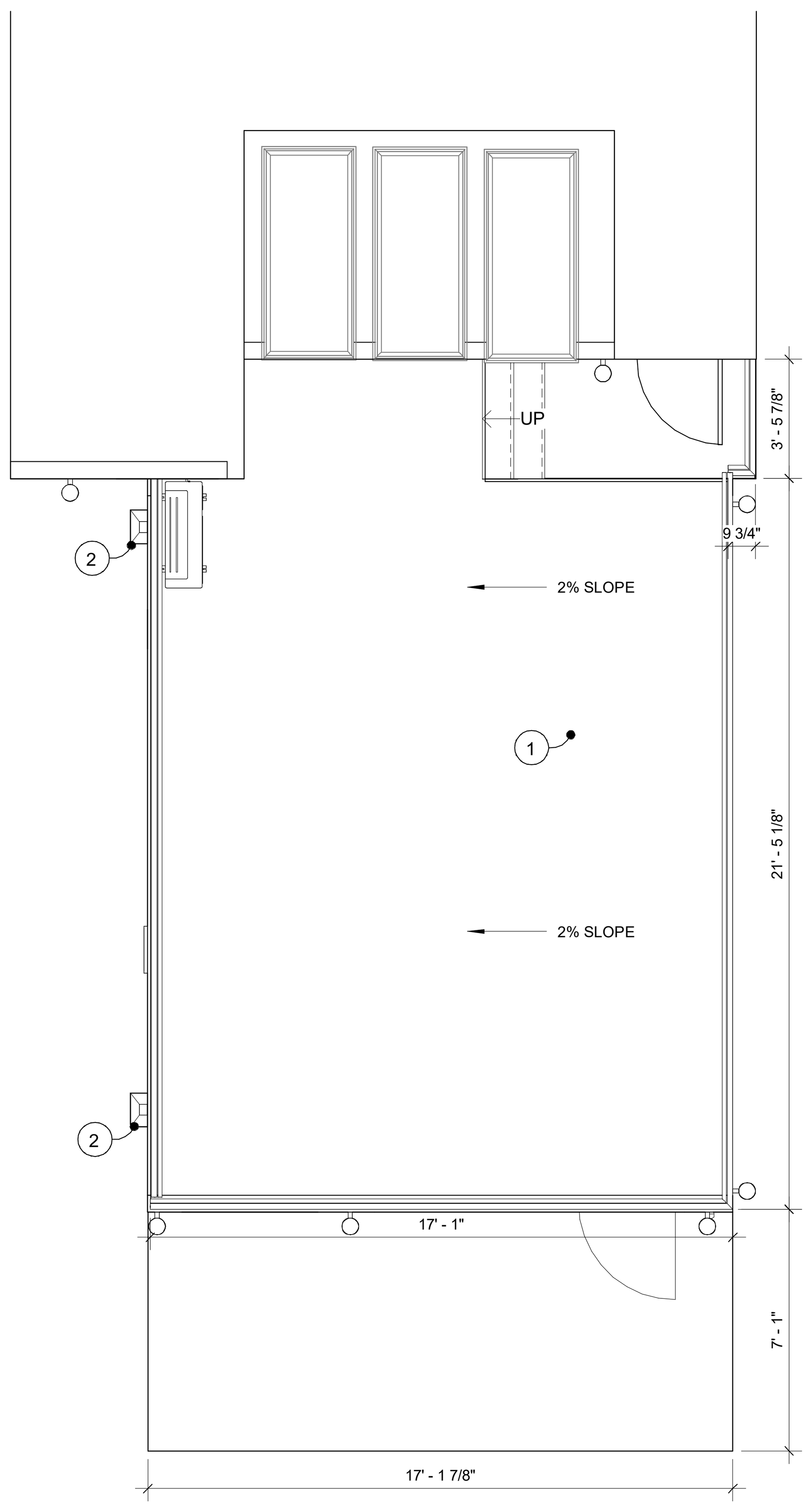

STORM WATER TO BE DIVERTED TO RETENTION PIT

ROOF LEGEND

▢	BATHROOM FAN TERMINATION CAP
◎	PLUMBING VENT
▪	DOWNSPOUT
← 2%	DIRECTION OF DRAINAGE

KEYNOTES

1. FLAT ROOF CLASS A FIRE RATED / TPO: SEE SPECS ON 1/A-8.0
2. GUTTERS INTEGRATED IN OVERHANG

ADDITIONAL NOTES:

1. PROPOSED ROOF ASSEMBLY SHALL BE UNVENTED, PER THE FOLLOWING: CRC 806.5 INSULATION INSTALLATION NOTES FOR UNVENTED ATTIC AND UNVENTED ENCLOSED RAFTER ASSEMBLIES: UNVENTED ATTICS AND UNVENTED ENCLOSED ROOF FRAMING ASSEMBLIES CREATED BY CEILINGS THAT ARE APPLIED DIRECTLY TO THE UNDERSIDE OF THE ROOF FRAMING MEMBERS AND STRUCTURAL ROOF SHEATHING APPLIED DIRECTLY TO THE TOP OF THE ROOF FRAMING MEMBERS/RAFTERS, SHALL BE PERMITTED WHERE ALL THE FOLLOWING CONDITIONS ARE MET:
   - A. CRC 806.5.1. THE UNVENTED ATTIC SPACE IS COMPLETELY WITHIN THE BUILDING THERMAL ENVELOPE.
   - B. CRC 806.5.2. NO INTERIOR CLASS I VAPOR RETARDERS ARE INSTALLED ON THE CEILING SIDE (ATTIC FLOOR) OF THE UNVENTED ATTIC ASSEMBLY OR ON THE CEILING SIDE OF THE UNVENTED ENCLOSED ROOF FRAMING ASSEMBLY.
   - C. CRC 806.5.5. INSULATION SHALL BE LOCATED IN ACCORDANCE WITH THE FOLLOWING: CRC 805.5.1.2 AIR-PERMEABLE INSULATION IS PROVIDED INSIDE THE BUILDING THERMAL ENVELOPE DIRECTLY BELOW THE STRUCTURAL SHEATHING. RIGID BOARD OR SHEET INSULATION SHALL BE INSTALLED DIRECTLY ABOVE THE STRUCTURAL ROOF SHEATHING
2. PROVIDE A MINIMUM OF ONE LAYER OF #15 FELT UNDER ALL ROOFING MATERIALS OR PER THE ROOFING MANUFACTURER INSTALLATION REQUIREMENTS.
3. PROVIDE A MINIMUM OF TWO-LAYERS OF #15 FELT UNDER ALL ROOFING MATERIALS WHEN THE SLOPE IS LESS THAN 4:12 OR PER THE ROOFING MANUFACTURER INSTALLATION REQUIREMENTS

1 PROPOSED ROOF PLAN
1/4" = 1'-0"

NEW ATTACHED ADU STUDIO MODULE (763B LAKEVIEW AVE.)

763 LAKEVIEW AVE.
SAN FRANCISCO, CA 94112

N

AKD homes
ACCESSORY DWELLING UNITS
WWW.AKDHOMES.COM
EMAIL: DESIGN@AKDHOMES.NET
TEL: 510-314-0564

ISSUANCES

No.	Description	Date
1	PLANNING	5.16.22

Designed By: Janelle Vargas

Janelle Vargas

email: jburnett@disenodesign.net phone: 620-655-8299

PROPOSED ROOF PLAN

APPROVED
Dept. of Building Insp.
-San Francisco-
08/06/2024

Drawing Scale: 1/4" = 1'-0"

Job No. PLANS

A-2.0

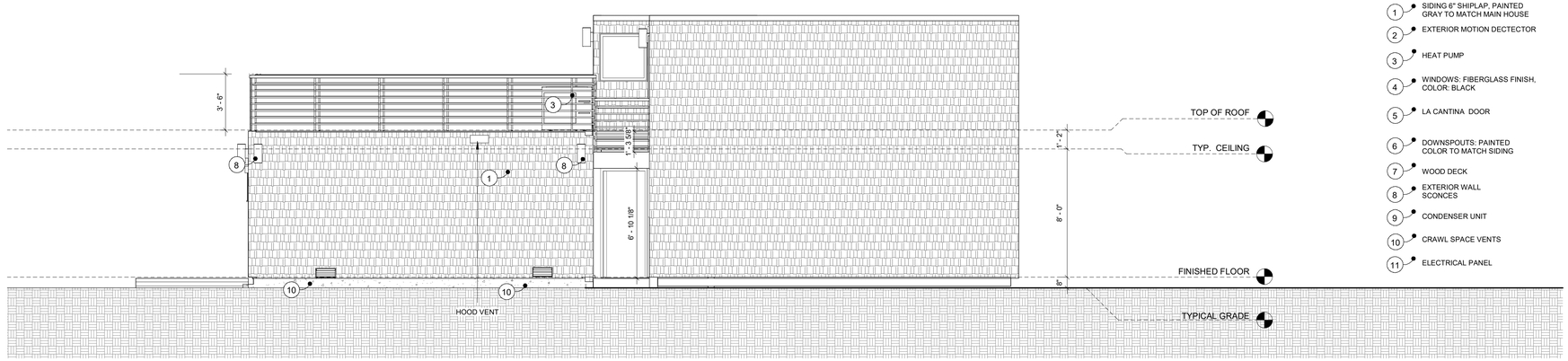

1 PROPOSED FRONT ELEVATION
1/4" = 1'-0"

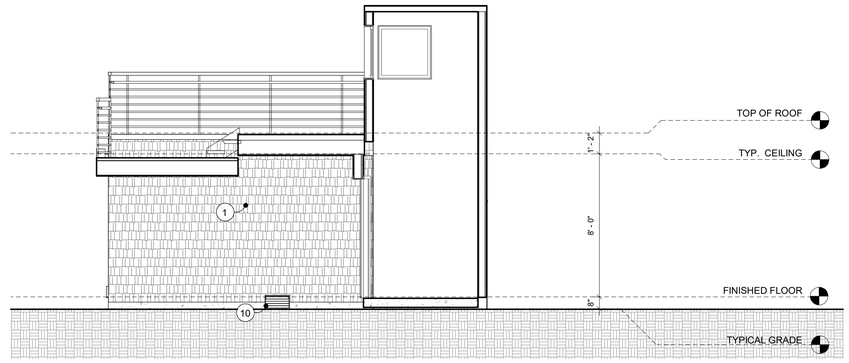

2 PROPOSED SIDE A ELEVATION
1/4" = 1'-0"

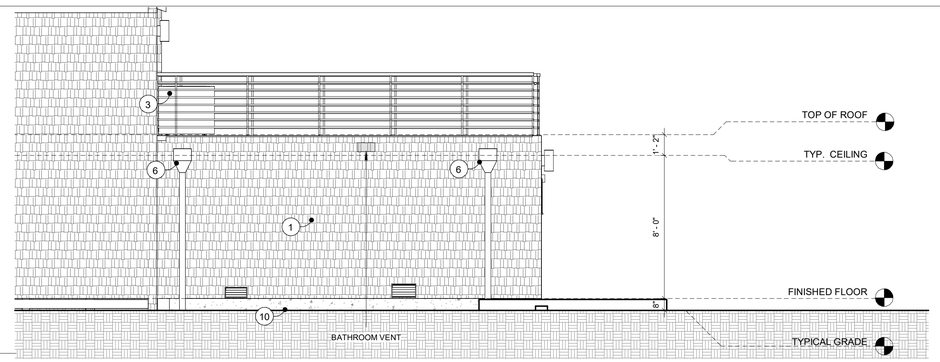

3 PROPOSED REAR ELEVATION
1/4" = 1'-0"

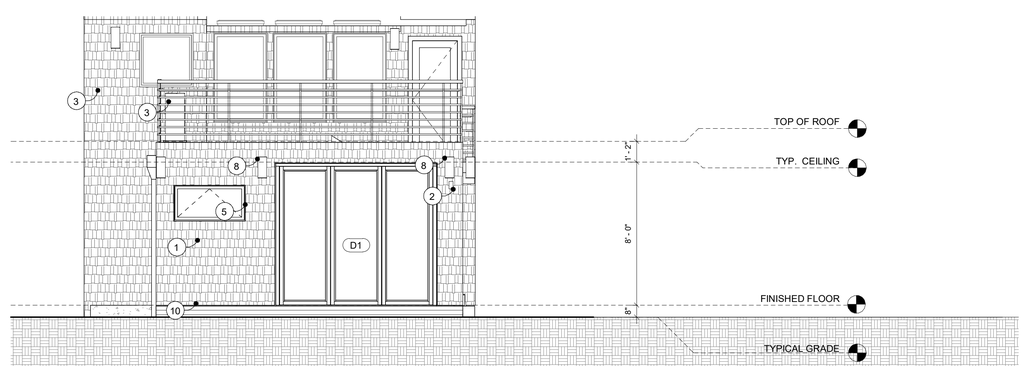

4 PROPOSED SIDE B ELEVATION
1/4" = 1'-0"

NEW ATTACHED ADU STUDIO MODULE (763B LAKEVIEW AVE.)

763 LAKEVIEW AVE.
SAN FRANCISCO, CA 94112

AKD homes
ACCESSORY DWELLING UNITS

WWW.AKDHOMES.COM
EMAIL: DESIGN@AKDHOMES.NET
TEL: 510-314-0564

ISSUANCES

No.	Description	Date
1	PLANNING	5.16.22

Designed By: Janelle Vargas

email: jburnett@disenodesign.net phone: 620-655-8299

PROPOSED ELEVATIONS

APPROVED
Dept. of Building Insp.
-San Francisco-
08/06/2024

Drawing Scale: 1/4" = 1'-0"

Job No. PLANS

A-3.0

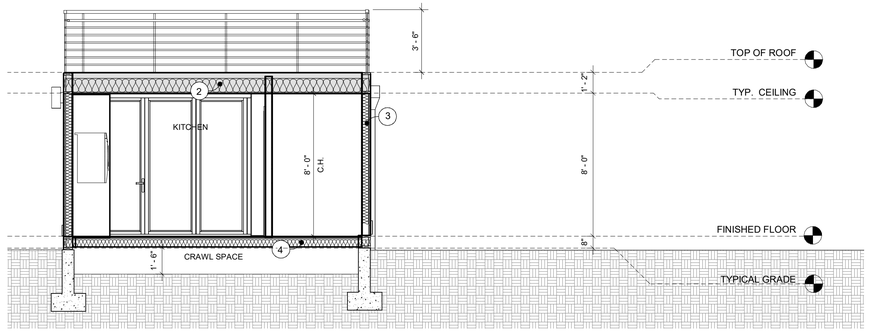

1 Section 4
1/4" = 1'-0"

KEYNOTES

1	EXTERIOR LANDINGS AT EXTERIOR DOORS SHALL NOT BE MORE THAN 7.75" BELOW THE TOP OF THE DOOR THRESHOLD. 2019 CRC R311.3.2
2	ROOF INSULATION -TYPICAL CLOSED CELL SPRAY FOAM INSULATION - R-30 WITH R-10 DECK
3	WALL INSULATION R-21
4	FLOOR ASSEMBLY INSULATION R-19
5	X
6	HOOD WALL TERMINATION

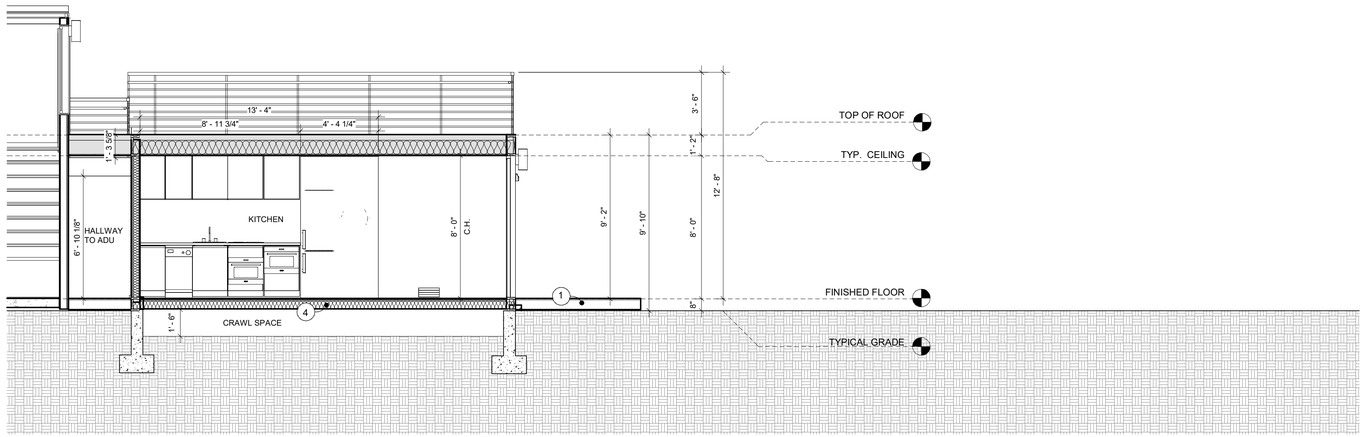

2 Section 3
1/4" = 1'-0"

NEW ATTACHED ADU
STUDIO MODULE
(763B LAKEVIEW AVE.)

763 LAKEVIEW AVE.
SAN FRANCISCO, CA 94112

AKD homes
ACCESSORY DWELLING UNITS
WWW.AKDHOMES.COM
EMAIL: DESIGN@AKDHOMES.NET
TEL: 310-314-0564

ISSUANCES

No.	Description	Date
1	PLANNING	5.16.22

Designed By: Janelle Vargas

email: jburnett@disenodesign.net phone: 620-655-8299

BUILDING SECTIONS

APPROVED
Dept. of Building Insp.
-San Francisco-
08/06/2024

Drawing Scale: 1/4" = 1'-0"

Job No. PLANS

A-4.0

ELECTRICAL LEGEND

- HIGH EFICACY RECESSED LED CAN DOWNLIGHTS
- HIGH EFICACY RECESSED LED CAN DOWNLIGHTS- WATER PROOF
- ISLAND PENDANTS
- VANITY SCONCE
- MOTION DECTECTOR EXTERIOR WALL SCONCE
- UNDER CABINET LIGHT
- EXTERIOR STEP LIGHT (LED)
- TV CONECTION
- HDMI
- DOOR BELL
- SWITCH
- DIMMER SWITCH (LEVITON / SMART HOME CONTROL) REMOTE CONTROLS WILL BE LOCATED IN FIELD
- MANUAL ON-OCCUPANCY SENSOR *motion sensor with a manual-on/automatic –off switch and photocontrol per 2016 CEC 150(k)13*
- RECEPTACLE DUPLEX 120V/60HZ - 16" F.F.
- RECEPTACLE GFCI DUPLEX / WEATHER PROOF - 16" F.F.
- RECEPTACLE GFCI DUPLEX - 16" F.F.
- RECEPTACLE GFCI/USB - 16" F.F.
- RECEPTACLE GFCI DUPLEX - 42" F.F.
- RECEPTACLE DUPLEX - 60" (HOOD) F.F.
- RECEPTACLE GFCI QUAD - 16" F.F.
- RECEPTACLE DUPLEX OUTLET 220 VOLT
- RECEPTACLE DUPLEX OUTLET 240 VOLT
- RECEPTACLE - OVERHEAD (FOR SHADES) - 84" F.F. U.D.I.

MECANICHAL LEGEND

- WATER HEATER - SEE SPECS ON 1/A-8.1
- BATHROOM / LAUNDRY EXHAUST FAN - SEE SPECS ON 2/A-8.1
- AC CONDENSER — HEAT PUMP
- MINI SPLIT SYSTEM
- 8'-0" CEILING A.F.F

PLUMBING LEGEND

- SHOWER CONTROLS
- WATER CONNECTION
- HB — HOSEBIB

- E-SUB — ELECTRICAL SUB PANEL 100 AMP SERVICE
- SMOKE DETECTOR/ AC/DC INTERCONNECTED
- SD/CM — SMOKE DETECTOR/CARBON MONOXIDE COMBINATION
- THERMOSTAT (NEST)
- CAT6
- ALIGN CENTER FIXTURE
- ELECT. PANEL

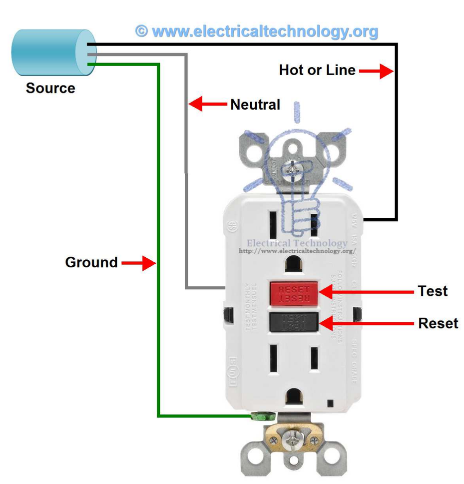

ALL WEATHER EXTERIOR COVER:

PROVIDE DETAIL GRAPHICS THAT SHOW AT LEAST ONE EXTERIOR RECEPTACLE OUTLET, WITH AN ALLWEATHER-USE COVER, SHALL BE PROVIDED AT THE REAR {SIDE} AND FRONT OF THE DWELLING (210.52 (E))

NOTE ON PLAN SHOWING ALL LIGHT FIXTURES IN NEW OR REMODELED BATHROOMS AND LAUNDRY AREAS AT LEAST ONE LUMINAIRE SHALL BE CONTROLLED BY A VACANCY SENSOR. IDENTIFY VACANCY SENSOR SWITCH ON PLANS TO BE "$V" OR OTHER METHODS. (CENC 150 (K)(2)(J)).

3 ELECTRICAL & PLUMBING LEGENDS - FIRST FLOOR
1/4" = 1'-0"

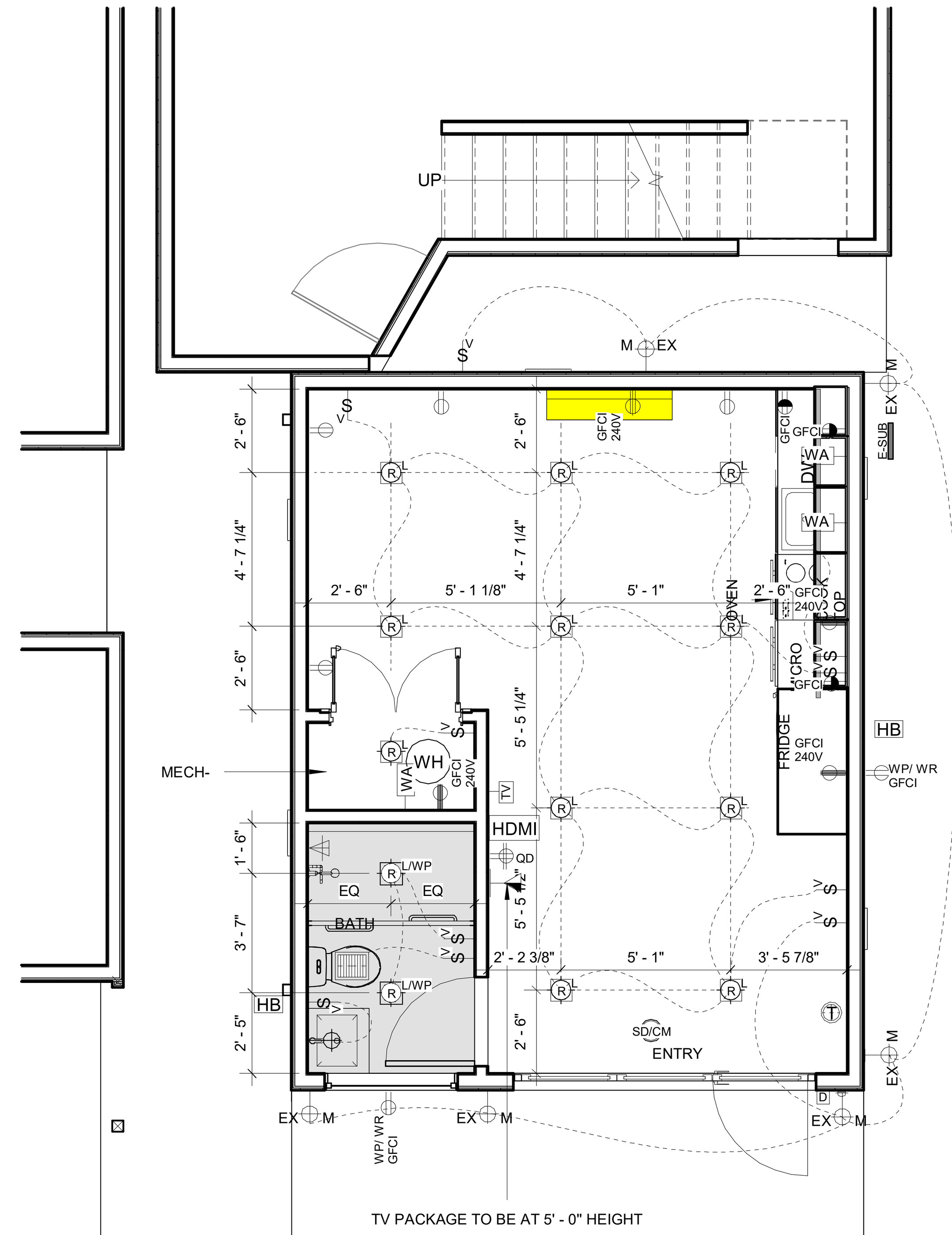

1 PROPOSED ELECTRICAL PLAN - MODULE 3-3BR
1/4" = 1'-0"

ELECTRICAL NOTES:

1. ALL LIGHT FIXTURES, OUTLET, SWITCHES, SMOKE DETECTORS AND OTHER ELECTRICAL FIXTURES SHALL MEET THE LATEST CODE REQUIREMENT. ALL RECEPTACLES SHALL BE GFCI PROTECTED AND TAMPER RESISTANT (TR). NEW/ADDITIONAL OUTLETS SHALL HAVE A DEDICATED 20-AMP CIRCUIT. (CEC 210.8, 210.11, 406.11)

2. EXHAUST FANS WITH MINIMUM VENTILATION RATE OF 50 CFM ARE REQUIRED IN ALL BATHROOMS, EVEN IF AN OPERABLE WINDOW IS INSTALLED. EXHAUST FANS AND LIGHTING SHALL HAVE SEPARATE CONTROL SWITCHES. THE EXHAUST FAN MAY NEED TO BE SUPPLIED BY A GFCI PROTECTED CIRCUIT BASED ON THE MANUFACTURE'S REQUIREMENTS. THE EXHAUST FAN DUCT SHALL TERMINATE A MINIMUM OF THREE FEET FROM ANY OPENING IN THE BUILDING (ATTIC VENT, WINDOW, DOOR, ETC.). (CEES 150.0(o) and CMC 504.5). ALL EXHAUST FANS SHALL BE ENERGY STAR COMPLIANT, WITH HUMIDITY CONTROLS ADJUSTING FROM 50% TO 80%, AND BACKDRAFT DAMPERS.

3. LIGHTING EFFICACY: ALL LIGHTING MUST BE HIGH EFFICACY. ALL LIGHTS MUST EITHER COMPLY WITH COLUMN A OF TABLE 150.0-A OR CONTAIN JA8 HIGH EFFICACY LIGHT SOURCES MARKED JA8-2016 OR JA8-2016-E.

4. SMOKE ALARMS SHALL BE REPLACED 10 YEARS AFTER THE DATE OF MANUFACTURE LISTED ON THE ALARM (IF NO DATE IS LISTED THE ALARM SHALL BE REPLACED). NEWLY INSTALLED SMOKE ALARMS SHALL HAVE A 10-YEAR-OLD BATTERY.

5. CARBON MONOXIDE ALARMS SHALL BE INSTALLED ON THE CEILING OR WALL (ABOVE THE DOOR HEADER) IN EACH ARE/HALLWAY ADJACENT TO SLEEPING ROOMS, EACH STORY OF THE BUILDING, AND ANY BASEMENT. CARBON MONOXIDE ALARMS ARE NOT REQUIRED IF THERE IS NO FUEL-BURNING APPLIANCES AND WHERE THE GARAGE IS DETACHED FROM THE HOUSE.

6. ALL PROPOSED COMBINATION SMOKE ALARMS/ CARBON MONOXIDE DETECTORS SHALL BE 110V POWERED, INTERCONNECTED WITH A BATTERY BACKUP. INSTALLATION, IF NECESSARY, SHALL COMPLY WITH CRC R314, R314.3, R314.6.2, CBC 907.2.11, CRC 315.1

7. NEW 110V SMOKE DETECTORS WITH BATTERY BACKUP, WHICH ARE AUDIABLE IN ALL SLEEPING AREAS SHALL BE INSTALLED IN THE FOLLOWING LOCATION- BEDROOMS, HALLWAYS LEADING TO BEDROOMS, ABOVE TOPS OF STAIRS, ANY AREA WHERE CEILING HEIGHT IS OVER 24" ABOVE A HALLWAY CEILING LEADING TO BEDROOMS AND MIN. ONE ON EVERY LEVEL. For placement of smoke alarms and carbon monoxide alarms in rooms with variations in ceiling height (sloped, pitched etc.), refer to the manufacturers guidelines for proper placement

8. ALL CLOSETS TO CEILING TO BE 8'-0" A.F.F, UNLESS NOTED OTHERWISE.

9. PROVIDE SEPARATE CIRCUITS FOR DISPOSAL AND DISHWASHER AND TWO 20-AMP GFCI PROTECTED CIRCUITS IN THE KITCHEN COUNTER AND PENINSULA OUTLETS 2019 CEC 210.52(B) (3)

10. PROVIDE 220 volts, 30 amp dedicated circuit for dryer per CEC 220.54

11. PROVIDE 20 AMP BRANCH CIRCUITS AT BATHROOMS

12. PROVIDE GFCI PROTECTED OUTLETS AT 48" MAXIMUM SPACING, 24" FROM ENDS AT KITCHEN COUNTERTOP

13. PROVIDE ELECTRICAL RECEPTACLES AT 12 FEET MAXIMUM SPACING AND 6 FEET FROM DOORS AT BEDROOMS, LIVING ROOM, DINING ROOM AND FAMILY ROOM

14. ALL 120V, 15 AND 20 AMP RECEPTACLES INSTALLED OUTDOOR, IN BATHROOMS, KITCHEN COUNTERTOP AND GARAGE TO BE EQUIPPED WITH GFCI PROTECTION

15. COMBINATION TYPE ARC-FAULT CIRCUIT INTERRUPTER SHALL PROTECT ALL RECEPTACLES IN ALL BEDROOMS, DINING ROOMS, LIVING ROOMS, PARLORS, LIBRARIES, DENS, SUNROOMS, RECREATION ROOMS, CLOSETS, HALLWAYS OR SIMILAR ROOMS OR AREAS WITH BRANCH CIRCUITS THAT SUPPLY 125 VOLT, SINGLE PHASE, 15 AND 20 AMPERE RECEPTACLE OUTLETS 2019 CEC SEC. 210.12(B)

16. ALL RECEPTACLES SHALL BE TAMPER RESISTANT CEC. SEC. 406.11

17. ALL CONCEALED LIGHT FIXTURES WILL BE I.C RATED, WHEREVER INSULATION IS REQUIRED. THE HOUSING FOR LUMINARIES SHALL BE AIRTIGHT AND SHALL NOT HAVE SCREW-BASE SOCKETS; SHALL BE SELAED WITH A GASKET OR CAULK BETWEEN THE LUMINAIRE HOUSING AND CEILING; SHALL CONTAIN JA8-2016 LIGHT SOURCE OR JA8-2016-E IF ENCLOSED.

18. LIGHTING FIXTURES LOCATED WITHIN 3' HORIZONTALLY AND 8' VERTICALLY OF THE BATHTUB RIM OR SHOWER STALL THRESHOLD SHALL BE LISTED FOR DAMP LOCATION, OR LISTED FOR WET LOCATIONS WHERE SUBJECT TO SHOWER SPRAY. (CEC 410.10)

19. (E) MAIN ELECTRICAL PANEL 200AMP. CONTRACTOR TO PROVIDE SUBPANEL OF 100A FOR ADU

20. OUTDOOR LIGHTING TO MEET MANUAL AND AUTOMATED CONTROL REQUIREMENTS OF ENERGY CODE SECTION 150.0(k)3

21. PROVIDE A SEPARATED CIRCUIT FOR FAU PER EQUIPMENT SPECIFICATIONS.

22. PROVIDE A SEPARATED 20AMP CIRCUIT FOR LAUNDRY

23. PROVIDE SPECIFICATIONS ON PLAN REQUIRING THAT ALL ELECTRICAL CONDUCTOR MATERIAL SHALL BE COPPER. (DCMC 15.24.100).

PLUMBING AND MECHANICAL NOTES:

- CAL GREEN 4.303.1.3.1 Single showerhead. Showerheads shall have a maximum flow rate of not more than 1.8 gallons per minute at 80 psi. Showerheads shall be certified to the performance criteria of the U.S. EPA WaterSense Specification for Showerheads. **4.303.1.3.2 Multiple showerheads serving one shower.** When a shower is served by more than one showerhead, the combined flow rate of all showerheads and/or other shower outlets controlled by a single valve shall not exceed 1.8 gallons per minute at 80 psi, or the shower shall be designed to allow only one shower outlet to be in operation at a time.
Note: A hand-held shower shall be considered a Showerhead.
- CAL GREEN 4.303.1.4.1 Residential lavatory faucets. The maximum flow rate of residential lavatory faucets shall not exceed 1.2 gallons per minute at 60 psi. The minimum flow rate of residential lavatory faucets shall not be less than 0.8 gallons per minute at 20 psi.
- CAL GREEN 4.303.1.4.4 Kitchen faucets. The maximum flow rate of kitchen faucets shall not exceed 1.8 gallons per minute at 60 psi. Kitchen faucets may temporarily increase the flow above the maximum rate, but not to exceed 2.2 gallons per minute at 60 psi, and must default to a maximum flow rate of 1.8 gallons per minute at 60 psi.
- Note: Where complying faucets are unavailable, aerators or other means may be used to achieve reduction.

1. SHOWER STALLS SHALL HAVE A MINIMUM FINISHED INTERIOR OF 1,024 SQ. IN, BE CAPABLE OF ENCOPASING A 30" DIAMETER CIRCLE. ANY DOORS SHALL SWING OUT OF THE ENCLOSURE AND HAVE A MINIMUM OPENING OF 22". CPC 408.5, 408.6)

2. ALL SHOWERS AND BATHTUBS SPACES WITH INSTALLED SHOWER HEADS TO BE FINISHED WITH A NON ABSORBENT SURFACE EXTENDED NO LESS THAN 6 FEET ABOVE THE FINISHED FLOOR. CRC 2019 SEC R307 4 INCH DRAINAGE PIPE SHALL BE REQUIRED FOR FOUR OR MORE WATER CLOSET FIXTURES ON THE SAME HORIZOMTAL BRANCH OR DRAIN. CPC TABLE 703.2

3. CUSTOM SHOWERS SHALL COMPLY WITH CRC SEC. R307.2 AND R702.4.2

4. WHERE WATER CLOSET (OR OTHER PUMBING FIXTURE) COMES IN CONTACT WITH THE WALL OR FLOOR, THE JOINT SHALL BE CAULKED AND SEALED TO BE WATERTIGHT. (CPC 402.2)

5. NEW TOILETS SHALL BE 1.28 GALLON PER FLUSH

6. LAUNDRY ROOM DOOR SHALL HAVE LOUVERED OPENINGS TO ALLOW A MINIMUM OF 100 SQ. IN. OF CLEAR AREA FOR AIR FLOW

7. PROVIDE WATER HAMMER ARRESTORS AT ALL APPLIANCES THAT HAVE QUICK-ACTING VALVES.

8. UNDER FLOOR DUCTS, IF ANY, SHALL HAVE CLEARANCES TO EARTH AND NOT PASS THROUGH MINIMUM REQUIRED CRAWL SPACE ACCESS POINTS

9. NEW WATER HEATER SHALL BE MOUNTED ON A PLATFORM OR WALL MINIMUM 18" ABOVE FINISHED FLOOR, MEASURED TO THE FLAME. NEW TANKLESS WATER HEATERS SHALL BE MOUNTED ON EXTERIOR FACE OF WALL.

10. PIPE INSULATION: IINSTALL ≥1" foam insulation on all accessible hot water and recirculation piping with a diameter of ≤1"; pipes of diameter >1" - <2" to have insulation at least as thick as the diameter of the pipe; ≥2" insulation on pipes ≥2" diameter. Include insulation on pipes in walls. Insulate 5' of cold water piping adjacent to water heater. (Energy Code § 150 (j) 2; Plumbing Code § 609.11).

11. CLEANOUTS PLUG (707 CPC): EACH CLEANOUT FITTING FOR CAST-IRON SHALL CONSIST OF A CAST-IRON OR COPPER ALLOY BODY AND AN APPROVED PLUG. EACH CLEANOUT FOR GALVANIZED WROUGH-IRON, GALVANIZED STEEL, COPPER OR COPPER ALLOY PIPE SHALL CONSIST OF A PLUG AS SPECIFIED IN TABLE 707.1 CPC.

12. CLEANOUTS LOCATIONS (719 CPC): SHALL BE PLACED INSIDE THE BUILDING NEAR THE CONNECTION BETWEEN THE BUILDING DRAIN AND THE BUILDING SEWER OR INSTALLED OUTSIDE THE BUILDING AT THE LOWER END OF THE BUILDING DRAIN AND EXTENDED TO GRADE.

13. ALL CLEANOUTS EXTENDED TO THE EXTERIOR WHEN LOCATED MORE THAN 20' FROM THE CRAWL HOLE.

14. PROVIDE A CLEANOUT TO BE 2' OF THE BUILDING FOUNDATION ON THE EXTERIOR OF THE BUILDING.

15. ALL NEW HOSE BIBS TO HAVE NON-REMOVABLE BACKFLOW DEVICE.

16. PLUMBING CONTRACTOR WILL PROVIDE A SINGLE LINE DIAGRAM AT TIME OF INSPECTION AND ANY INSTALLATION PRIOR TO PLAN CHECK AND APPROVAL IS AT CONTRACTOR'S RISK

17. CHECK VALVE AND SIZING REQUIREMENTS FOR WATER SUPPLY LINE WILL BE CHECKED WITH WATER PURVEYOR AND FIRE SPRINKLER CONTRACTOR.

18. ALL 15 AND 20 AMPERE RECEPTACLES INSTALLED IN THE "BATHROOMS, GARAGE AND ACCESSORY BUILDINGS, CRAWL SPACE, UNFINISHED BASEMENTS, KITCHENS, SINKS, OUTLETS INSTALLED WITHIN 6 FEET OF A BATHTUBS OR SHOWER STALL, LAUNDRY AREAS & EXTERIOR LOCATIONS SHALL BE PROTECTED BY A GROUND FAULT CIRCUIT INTERRUPTER (GFCI) (CEC 210.8)

19. SPECIFY ON PLAN: ALL 15 AND 20 AMPERES BRANCH CIRCUITS SUPPLYING ALL OUTLETS OR DEVICES IN NEW HABITABLE ROOMS AND NON-HABITABLE ROOMS (LAUNDRY AREAS, HALLWAYS, CLOSETS, SUNROOMS, ETC.) SHALL BE PROTECTED BY AN ARC-FAULT CIRCUIT INTERRUPTER (AFCI) (CEC 210.12 (A))

20. PROVIDE AT LEAST TWO 20-AMPERE BRANCH CIRCUITS TO SERVE COUNTER- TOP RECEPTACLES FOR SMALL KITCHEN APPLIANCES (CEC 210.52 (B))

21. PROVIDE DETAIL GRAPHICS THAT SHOW AT LEAST ONE RECEPTACLE OUTLET FOR EACH 12-INCH OR WIDER WALL COUNTER SPACE, INSTALLED SO THAT NO POINT ALONG THE WALL LINE IS MORE THAN 24 INCHES FROM A RECEPTACLE OUTLET, EDGE OF SINK OR RANGE, IN THAT SPACE (CEC 210.52 (C)) (6) & 406.11)).

22. PROVIDE A GFCI PROTECTION FOR OUTLETS THAT SUPPLY DISHWASHERS (CEC 210.8 (D).

23. THE LOCATION OF THE MAIN SERVICE DISCONNECT IN READILY ACCESSIBLE LOCATION OUTSIDE OF THE BUILDING AND SHALL BE SCREENED FROM PUBLIC VIEW BY AN ENCLOSURE (DCMC 15.24.050).

24. FOR EACH DWELLING UNIT INSTALL A LISTED RACEWAY TO ACCOMMODATE A DEDICATED 208/240-VOLT BRANCH CIRCUIT. THE RACEWAY SHALL NOT BE LESS THAN TRADE SIZE 1 (NOMINAL 1-INCH INSIDE DIAMETER). THE RACEWAY SHALL ORIGINATE AT THE MAIN SERVICE OR SUB PANEL AND SHALL TERMINATE IN A LISTED CABINET, BOX OR OTHER ENCLOSURE IN CLOSE PROXIMITY TO THE PROPOSED LOCATION OF THE EV CHARGER. THE SERVICE PANEL AND/OR SUBPANEL SHALL PROVIDE CAPACITY TO INSTALL 40 AMPERE MINIMUM DEDICATED BRANCH CIRCUIT AND SPACE RESERVED TO PERMIT INSTALLATION OF A BRANCH CIRCUIT OVERCURRENT PROTECTIVE DEVICE (CGBC 4.106.4.1)

2 ELECTRICAL & PLUMBING NOTES
1/4" = 1'-0"

NEW ATTACHED ADU
STUDIO MODULE
(763B LAKEVIEW AVE.)

763 LAKEVIEW AVE.
SAN FRANCISCO, CA 94112

AKD homes
ACCESSORY DWELLING UNITS
WWW.AKDHOMES.COM
EMAIL: DESIGN@AKDHOMES.NET
TEL: 510-314-0564

ISSUANCES

No.	Description	Date
1	PLANNING	5.16.22

Designed By: Janelle Vargas

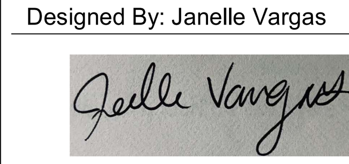

PROPOSED ELECTRICAL PLAN

APPROVED
Dept. of Building Insp.
-San Francisco-
08/06/2024

Drawing Scale: 1/4" = 1'-0"

Job No. PLANS

A-5.0

WINDOW SCHEDULE						
MARK	DESCRIPTION	W	H	MANUFACTURER	FINISH	COMMENTS
W1(T)	AWNING	4' - 0"	2' - 0"	ANDERSON 100 SERIES		
W5		3' - 0"	5' - 0"			
W6		3' - 0"	5' - 0"			
W31		3' - 0"	5' - 0"			
W32	FIXED	3' - 0"	3' - 0"	ANDERSON 100 SERIES		
W34	FIXED	3' - 0"	3' - 0"	ANDERSON 100 SERIES		
W40		3' - 0"	2' - 0"			
W41		4' - 0"	2' - 0"			
W42		4' - 0"	2' - 0"			
W43		3' - 0"	3' - 0"			
W44		4' - 0"	2' - 0"			
W45		3' - 0"	1' - 6"			
W46		3' - 0"	1' - 6"			
W47	FIXED	2' - 6"	3' - 0"	ANDERSON 100 SERIES		
W48	FIXED	2' - 6"	3' - 0"	ANDERSON 100 SERIES		
W49		4' - 0"	2' - 0"			

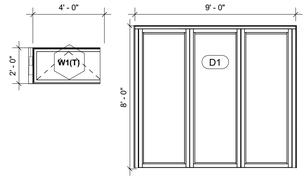

3 PROPOSED DOOR & WINDOW ELEVATION
1/4" = 1'-0"

DOOR SCHEDULE						
wt	FUNCTION	Description	Width	Height	Manufacturer	Comments
D1	Interior	Folding Patio Doors	9' - 0"	8' - 0"	Panoramic Doors	
ID1	Interior	SWING	2' - 8"	7' - 0"	MASONITE OR EQUAL	
ID2	Interior	GLASS SHOWER DOOR	5' - 0"	7' - 0"	CUSTOM	
ID3	Interior	7284 FR DOOR	4' - 0"	7' - 0"	MASONITE OR EQUAL	
ID6	Interior	Panel Door	2' - 6"	6' - 8"	Supa Doors, Inc.	
ID18	Interior		6' - 0"	7' - 0"		
ID19	Interior		5' - 0"	7' - 0"		
ID20			3' - 0"	7' - 0"		
ID21			3' - 0"	7' - 0"		
ID22	Exterior	GLASS PATIO DOOR	3' - 0"	6' - 0"	CUSTOM	

Contractor shall confirm the following:

Per California Fire code 2013 / 708A.2.1 Exterior glazed door assemblies shall comply with one of the following requirements:
1. Be constructed of multi-pane glazing with a minimum of one tempered pane meeting the requirements of Section 2406 Safety Glazing, or
2. Have a fire-resistance rating of not less than 20 minutes when tested according to NFPA 257 or
3. Be tested to meet the performance requirements of SFM 12-7A-2.

Per California Fire code 2013 / 708A.3 and 708A.3.1 Solid exterior doors shall comply with the following:
1. The exterior surface or cladding shall be of noncombustible or Ignition-resistant material, or
2. Shall be constructed of solid core wood having stiles and rails not less than 1 3/8 inches thick with interior field panel thickness no less than 1 1/4 inches thick, or
3. Shall have a fire-resistance rating of not less than 20 minutes when tested according to NFPA 252.

Exception: Solid doors having a fire-resistance rating of not less than 20 minutes may have untested glazing that complies with section 708A.2.
4. Shall be tested to meet the performance requirements of standard SFM 12-7A-1. 708A.3.1 Exterior door glazing. Glazing in exterior doors shall comply with Section 708A.2.1.

2 DOOR & WINDOW SCHEDULE/NOTES
1/4" = 1'-0"

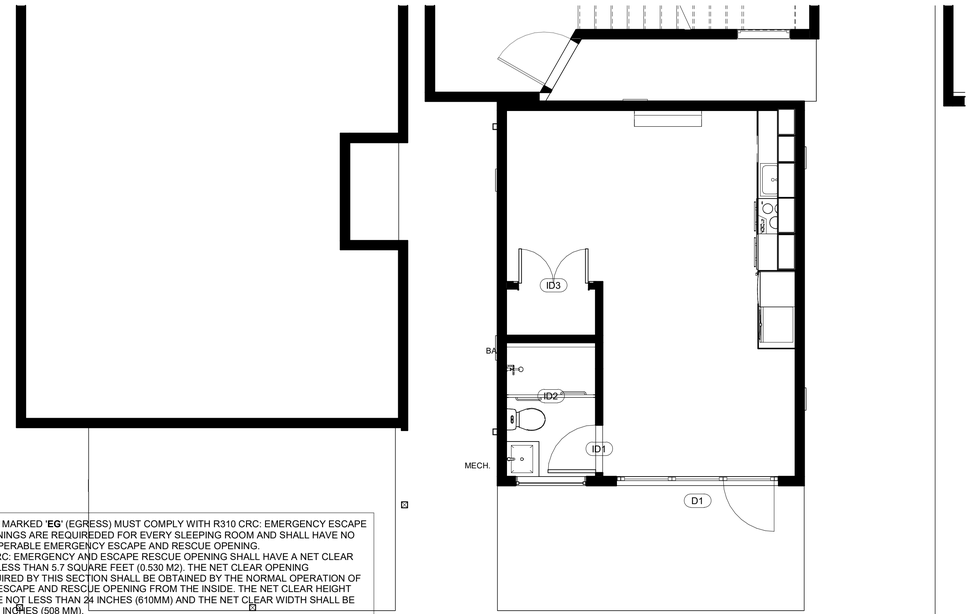

NOTE 1: WINDOWS MARKED '**EG**' (EGRESS) MUST COMPLY WITH R310 CRC: EMERGENCY ESCAPE AND RESCUE OPENINGS ARE REQUIREDED FOR EVERY SLEEPING ROOM AND SHALL HAVE NO LESS THAN ONE OPERABLE EMERGENCY ESCAPE AND RESCUE OPENING.
R310.2.1 CRC: EMERGENCY AND ESCAPE RESCUE OPENING SHALL HAVE A NET CLEAR OPENING OF NOT LESS THAN 5.7 SQUARE FEET (0.530 M2). THE NET CLEAR OPENING DIMENSIONS REQUIRED BY THIS SECTION SHALL BE OBTAINED BY THE NORMAL OPERATION OF THE EMERGENCY ESCAPE AND RESCUE OPENING FROM THE INSIDE. THE NET CLEAR HEIGHT OPENING SHALL BE NOT LESS THAN 24 INCHES (610MM) AND THE NET CLEAR WIDTH SHALL BE NOT LESS THAN 20 INCHES (508 MM).
R310.2.2 CRC: WINDOW SILL HEIGHT: WHERE A WINDOW IS PROVIDED AS THE EMERGENCY ESCAPE AND RESCUE OPENING, IT SHALL HAVE THE BOTTOM OF THE CLEAR OPENING NOT GREATER THAN 44 INCHES (1118 MM) MEASURED FROM THE FLOOR; WHERE THE SILL HEIGHT IS BELLOW GRADE, IT SHALL BE PROVIDED WITH A WINDOW WELL IN ACCORDANCE WITH SECTION R310.2.3

NOTE 2: ALL DOORS AND WINDOWS MARKED WITH A '**T**' ARE TO HAVE TEMPERED SAFETY GLASS PER SECTION R308.4 CRC AT THE LOCATIONS ESPECIFIED AS HAZARDOUS PER SECTION R308.4.1 THROUGH 310.4.7:

LEGEND:

(EG) - EGRESS
(T) - TEMPERED

1 PROPOSED KEY PLAN
1/4" = 1'-0"

NEW ATTACHED ADU
STUDIO MODULE
(763B LAKEVIEW AVE.)

763 LAKEVIEW AVE.
SAN FRANCISCO, CA 94112

AKD homes
ACCESSORY DWELLING UNITS
WWW.AKDHOMES.COM
EMAIL: DESIGN@AKDHOMES.NET
TEL: 510-314-0564

ISSUANCES

No.	Description	Date
1	PLANNING	5.16.22

Designed By: Janelle Vargas

email: jburgos@akdhomes.net 720-655-8299

DOOR & WINDOW SCHEDULE

APPROVED
Dept. of Building Insp.
-San Francisco-
08/06/2024

Drawing Scale: 1/4" = 1'-0"

Job No. PLANS

A-6.0

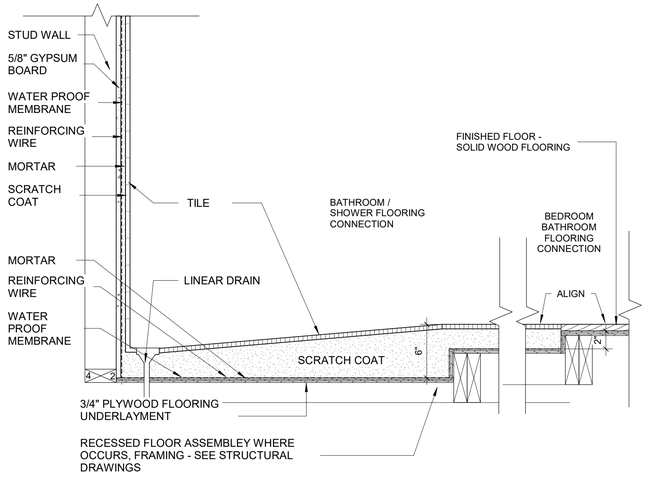

3 TYP. RECESSED SHOWER FLOOR / LINEAL DRAIN
1 1/2" = 1'-0"

GA FILE NO. WP 8105	GENERIC	1 HOUR FIRE	

GYPSUM WALLBOARD, GYPSUM SHEATHING, WOOD STUDS

Fire Design:

EXTERIOR SIDE: **One** layer 48″ wide 5/8″ type X gypsum sheathing applied parallel to 2 × 4 wood studs 24″ o.c. with 1-3/4″ galvanized roofing nails 4″ o.c. at vertical joints and 7″ o.c. at intermediate studs and top and bottom plates. Joints of gypsum sheathing may be left untreated. Exterior cladding to be attached through sheathing to studs.

INTERIOR SIDE: **One** layer 5/8″ type X gypsum wallboard, water-resistant gypsum backing board, or gypsum veneer base applied parallel or at right angles to studs with 6d coated nails, 1-7/8″ long, 0.0915″ shank, 1/4″ heads, 7″ o.c. **(LOAD-BEARING)**

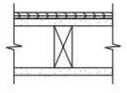

Thickness: 4-3/4″ without cladding (Fire)

Approx. Weight: 6 psf without cladding (Fire)

Fire Test: See WP 3510 (UL R3501-47, -48, 9-17-65, UL Design U309, UL R1319-129, 7-22-70, UL Design U314)

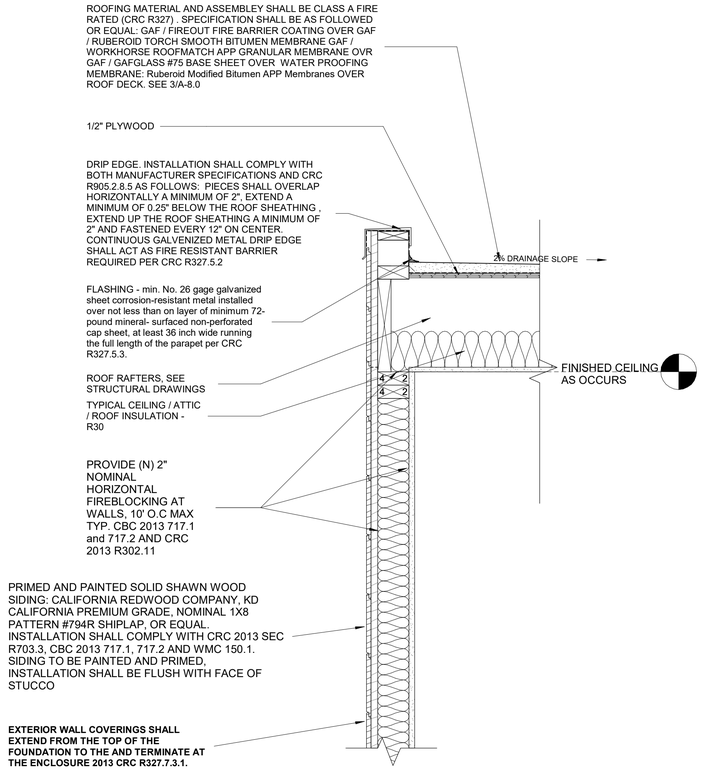

NOTES:

1. ALL EXTERIOR MATERIALS SHALL BE APPROVED BY 'THE WILD LIFE URBAN INTERFACE' (WUI)

2. CONTRACTOR SHALL VERIFY EXISTING CONDITION IN FIELD PRIOR TO CONSTRUCTION AND SHALL NOTIFY DESIGNER OF DISCREPANCIES

3. DETAILS ARE FOR DESIGN PURPOSES ONLY. PLEASE REFER TO STRUCTURAL DRAWINGS AND DETAILS FOR EXTERIOR AND INTERIOR FRAMING AND FOUNDATION, RAIL ANCHORING DETAILS, CONSTRUCTION DETAILS AND LOAD CALCULATIOS.

1 TYPICAL SIDING WALL ASSEMBLY AT FLAT ROOF
1 1/2" = 1'-0"

NEW ATTACHED ADU STUDIO MODULE (763B LAKEVIEW AVE.)

763 LAKEVIEW AVE.
SAN FRANCISCO, CA 94112

AKD homes
ACCESSORY DWELLING UNITS
WWW.AKDHOMES.COM
EMAIL: DESIGN@AKDHOMES.NET
TEL: 510-314-0564

ISSUANCES

No.	Description	Date
1	PLANNING	5.16.22

Designed By: Janelle Vargas
email: jburnett@disenodesign.net phone: 620-655-8299

DETAILS

APPROVED
Dept. of Building Insp.
-San Francisco-
08/06/2024

Drawing Scale: 1 1/2" = 1'-0"

Job No. PLANS

A-7.0

Safety Caps For Chimneys

Proudly Made In The U.S.A.

Safety Caps for chimneys provide protection against dangerous sparks while reducing downdrafts, clogging, soot, and creosote build-up. They also protect against animal and bird infestation, and deflect other debris and rain from entering the chimney. All Master Flow® Safety Caps feature:

- ***Superior Design...*** Single piece, heavy gauge hood for longer life and less chance for leaks
- ***Long-Lasting Construction...*** No rivets or seams to rust or corrode
- ***Great Looks...*** Epoxy powder finish provides long lasting protection *(note: stainless steel safety cap is unpainted)*
- ***Quick, Easy Installation...*** Using only a screwdriver
- ***Appropriate Code Approval...*** Meets most fire codes

STAINLESS STEEL SAFETY CAPS
- 100% stainless steel construction
- Recommended for coastal areas and for coal & oil burning furnaces
- 4 year ltd. warranty

Model No.	Fits Flue Tile Outer Dimensions
CC1313SS	11½" x 11½" – 13½" x 13½"
LKSS	Leg Kit

FIXED-SIZE SAFETY CAPS
- Our most popular safety caps fit all standard size chimneys
- 4 year ltd. warranty

Model No.	Fits Flue Tile Outer Dimensions/Shapes (Rectangular/Leg Kit)
CC99	7½" x 7½" – 9½" x 9½"
CC913	7½" x 11½" – 9½" x 13½"
CC1313	11½" x 11½" – 13½" x 13½"
LKSS	Leg Kit

ADJUSTABLE SAFETY CAPS
- Unique adjustable "lock-jaw" bracket mounts cap securely in place
- 4 year ltd. warranty

Model No.	Fits Flue Tile Outer Dimensions
SCCA	8" x 8" thru 13" x 13" 8" O.D. Round thru 12" O.D. Round

Foundation Vents

POWER
- Removes damaging moisture – helps prevent structural decay and mold growth
- Fits in traditional foundation vent openings, with simple plug and go operation
- Up to 330 CFM/airflow to eliminate moisture during peak times
- Tested and approved by independent laboratories

AUTOMATIC
- Automatically opens at 70°F, closes at 40°
- Helps prevent foundation decay
- Lowers risk of frozen pipes
- Replaces manual vent
- Snap-in installation
- Saves energy

GRATE STYLE
- Positive open/close damper action
- Lintel for foundation block construction
- Lowers risk of frozen pipes
- Saves energy
- Helps prevent foundation decay

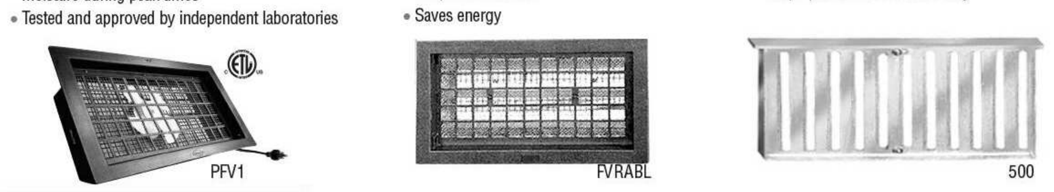

BLOCK STYLE
- Aluminum vanes; lintel not required
- For block, brick or frame construction
- Recommended for high level ventilation

GRILL STYLE
- Designed for nailing to floor joists or as a foundation block replacement

COVER
- Easy to mount over any 16"x8" foundation vent

Model No.	Style	Color	Construction	Description	N.F.V.A. (Sq. In.)
PFV1	Power	Black	Hi-Density Polyethylene	16" x 8" 330CFM 1yr. ltd. warranty	57
FVRABL	Automatic	Black	Hi-Density Polyethylene	16" x 8"	57
500	Grate	Mill	Die-cast aluminum	With lintel & slide action – 16" x 8"	28
BVSII	Block	Mill	Galv. Steel/Alum.	Moveable louvers–15⅝" x 8" x 2¼" deep	73
LW1	Grill	Mill	Die-cast aluminum	With damper – 16" x 8"	50
LW1L	Grill	Mill	Die-cast aluminum	With 1⅜" lintel & damper – 16" x 8"	50
FVC168	Cover	Mill	Aluminum	Cover- Fits most sizes	–

19

NOTES:

1.OPENING UNDER FLOOR ARE REQUIRES A MINIMUM OF ONE SQUARE FOOT OF VENTILATION FOR EACH 150 SQUARE FOOT OF UNDER FLOOR SPACE

2. OPENINGS ARE REQUIRED TO BE SPACED SO AS TO PROVIDE CROSS VENTILATION OF THE UNDER FLOOR SPACE

3. VENTILATION OPENINGS SHALL BE WITHIN 3 FEET OF EACH CORNER OF THE BUILDING CRC 2013 SEC R408.1
SEE FLOOR PLAN FOR LOCATION

4. THERE ARE SIX DIFFERENT OPTIONS FOR OPENING COVERINGS: PERFORATED SHEET METAL PLATES, EXPANDED SHEET METAL PLATES, CAST IRON GRILLES, EXTRUDED LOAD BEARING VENTS, HARDWARE CLOTH AND CORROSION RESISTANT WIRE MESH ARE ACCEPTABLE MATERIALS CRC R2013 SEC. R408.2

5. CONTRACTOR SHALL BE RESPONSIBLE TO INSTALL FOUNDATION VENT PER MANUFACTURER SPECIFICATIONS.

1 FOUNDATION VENT ESPECIFICATION.
1/4" = 1'-0"

Two Innovative Technologies. One Roofing Solution.

Granule-Surfaced Self-Adhering Membrane

LIBERTY™ SBS Self-Adhering Roofing System

- **No Fumes...** Eliminates the fumes and odors caused by hot asphalt or solvent-based adhesives
- **Safer...** Eliminates the need for open flames
- **Quicker Installation...** Often ⅓ faster than conventional systems, with minimal set-up or clean-up time
- **Extensive Color Choices...** Available in all of the granule-surfaced colors shown at right
- **Free Ltd. Warranty Against Material Defects...** For up to 15 years
- **Optional Guarantee Against Defects In Materials And Workmanship...** Up to 15-year protection—includes replacement materials, installation labor, and tear-off/disposal (if necessary)

LIBERTY™ roofing system products are available in seven popular colors designed to complement North America's #1-selling shingles, Timberline® Shingles — as well as other residential shingle roofs

Smooth-Surface Self-Adhering Membrane

EverGuard® FreedomTPO™ Self-Adhering Roofing Systems

- **Available in Heat-weld or RapidSeam™ Technology**
- **No Fumes...** Eliminates the fumes and odors caused by hot asphalt or solvent-based adhesives
- **Safer...** Eliminates the need for flammable adhesives or open flames
- **Quicker Installation...** Fewer steps and full line of accessories often result in ⅓ faster installation than conventional fully adhered systems, with minimal set-up or clean-up time
- **ENERGY STAR® Qualified...** To help you save on energy costs (U.S. only)
- **Free Ltd. Warranty Against Material Defects...** For up to 15 years
- **Optional NDL Guarantee Against Defects In Materials And Workmanship...** Up to 20-year protection (with heat-welded seams)—includes replacement materials, installation labor, and tear-off/disposal (if necessary)

GAF (/)

Get Easy
Pro Installation (/roofing/contractors)

EverGuard

60 MIL

Suitable for use in all types of single-ply systems: Mechanically Attached, Fully Adhered, and Ballast Applied

Single-Ply TPO
Roofing Membrane

EverGuard® TPO 60 Mil Membrane

Why TPO?

- **Great Value** — Excellent performance at a cost-effective price
- **Excellent Seam Strength** — Heat-welded seams provide greater seam strength to taped and other seams
- **Long-term Weathering** — Excellent long-term heat and UV resistance
- **Energy Saving** — Highly reflective and emissive white roof can help reduce energy costs and urban heat island effect
- **CREST Energy Savings Calculator** — See your potential savings at cool.gaf.com
- Versatile Application Method

Why GAF EverGuard® TPO?

- Outperforms standard TPO in heat aging and UV tests—the best predictors of TPO performance
  - Independent TPO Study proves EverGuard® TPO 60 mil Membrane is the best standard TPO in accelerated aging. View the key finding and full study (/Roofing/Commercial/Products/Single_Ply_Roofing/EverGuard_TPO_Single_Ply_Membranes/TPO_Results) here.
  - After accelerated heat aging at 275°F (135°C) for 112 days, EverGuard® TPO showed no cracking—while every one of the competitor samples had failed!
  - UV testing—Greater than 2.5 times the industry standard (ASTM D6878 weather resistance test)
- Guarantees are available up to 25 years when using EverGuard® TPO 60 mil Membrane.*
- Easier to install due to:
  - Large welding window
  - Most complete line of accessories
  - 10' (3.05 m) wide sheets

Installation

EverGuard® TPO 60 mil Membrane is suitable for all types of single-ply systems:

- **Mechanically Attached Application...** for a quick and cost-effective system that can be installed practically year-round.
- **RhinoBond® Application...** can be applied without using adhesives and installed practically year-round. Qualifies for the same guarantee length as an adhered system.*
- **Adhered Application...** can be installed with EverGuard® 1121 Bonding Adhesive (solvent based), EverGuard® Low VOC Adhesive, or EverGuard® WB181 Bonding Adhesive (water based) for the smoothest appearance. Provides excellent wind uplift performance.

Application

Field fabrication of TPO accessories is time-consuming, costly, and inconsistent, and can lead to unreliable details that compromise a watertigl roofing system. EverGuard® TPO prefabricated accessories deliver consistent quality and eliminate the worry and problems often associated with field fabrication. They can also boost productivity up to 200%,** while reducing installed cost by up to 12%.

Sustainability

GAF's sustainability credentials include:

- **NSF/ANSI 347** — Providing architects and contractors with a certified sustainable option for single-ply roofing membranes
- **UL Landfill Waste Diversion Validation** — Zero Waste to Landfill (Mt. Vernon TPO Plant)
- **HPDs** — Only single-ply roofing manufacturer that publishes Health Product Declarations (HPDs) for transparent reporting and LEED® v4 compliance
- **EPDs** — Publishes Environmental Product Declarations (EPDs) for Single-Ply Roofing Membranes

Applicable Standards

UL approved for use in the construction of Class A, B, or C roofs; FM Approved, ASTM D6878, Title 24 Compliant, Miami-Dade County Product Control Approved, Florida Building Code Approved, ENERGY STAR® Certified.*

Physical Properties	ASTM Test Method	ASTM D6878 Minimum	EverGuard® Typical Test Data
1. Certain data is provided in MD (machine direction) x CMD (cross machine direction) format.			
2. Data is based upon typical product performance, and is subject to normal manufacturing tolerance and variance.			
Nominal Thickness	ASTM D751	0.039" (min.) (0.99 mm)	0.060" (1.52 mm)
Breaking Strength	ASTM D751 Grab Method	220 lbf/in. (38.5 kn/m)	305 lbf x 290 lbf (454 x 432 kg/m
Factory Seam Strength	ASTM D751	66 lbf (98.34 kg/m)	135 lbf (membrane failure)(201.1 kg/m)
Elongation at Break	ASTM D751	15%	30%
Heat Aging	ASTM D573	90% Retention of Breaking Strength and Elongation at Break	100%
Tear Strength	ASTM D751 8" x 8" (203 x 203 mm) Sample	55 lbf (81.95 kg/m	75 lbf x 130 lbf (111.8 x 193.7 kg/m
Puncture Resistance	FTM 101C Method 2031	Not Established	380 lbs. (172 kg)
Cold Brittleness	ASTM D2137	-40° C	-40° C
Permeance	ASTM E96	Not Established	0.08 Perms
Dimensional Change	ASTM D1204 @158° F (70° C), 6 hrs.	+/-1%	0.4%
Water Absorption	ASTM D471 @158° F (70° C), 1 week	+/-3.0%	0.7%
Hydrostatic Resistance	ASTM D751 Method D	Not Established	430 psi
Ozone Resistance	ASTM D1149	No visible deterioration @ 7x magnification	No visible deterioration @ 7x magnification
Reflectivity (white) Initial/Aged	ASTM C1549	N/A	0.76/0.68
Emissivity (white) Initial/Aged	ASTM E408	N/A	0.90/0.83
Weather Resistance	ASTM G155/D6878	10,080 KJ/(m2 . nm) at 340 nm	>25,000 KJ/(m2 . nm) at 340 nm
Heat Aging	ASTM D573	240° F (115° C) for 32 weeks	60 weeks
Thickness Above Scrim	ASTM D7635	Min 30% of Total Thickness	22.1" (561 mm) (Nominal)

Guarantee

Up to 25 years

Product Data

Roll Size — **Note: Product sizes, dimensions, and widths are nominal values and are subject to normal manufacturing/packaging tolerance and variation.**

Color	Full Size Roll	Full Roll Weight	Half Roll Size	Half Roll Weight
White, Tan, Gray, Energy Tan, Energy Gray	10' x 100' (3.05 x 30.5 m) (1,000 sq. ft. [92.9 sq.m])	322 lbs. (146 kg)	5' x 100' (1.52 x 30.5 m) (500 sq. ft. [46.5 sq.m])	162 lbs. (73.5 kg)
	8' x 100' (2.44 x 30.5 m) (800 sq. ft. [74.3 sq.m])	257 lbs. (117 kg)	4' x 100' (1.21 x 30.5 m) (400 sq. ft. [37.1 sq.m])	128.8 lbs. (58.4 kg)

Note: Membrane rolls shipped horizontally on pallets, stacked pyramid-style and banded.

Storage — Store rolls on their sides on pallets or shelving in a dry area.

Safety Warning — Membrane rolls are heavy. Position and install by at least two people.

EverGuard® TPO 60 mil Membrane

Applicable Standards

UL Listed, FM Approved, Miami-Dade County Approved, Florida Building Code Approved, CRRC Listed, Title 24 Compliant*, ENERGY STAR® Qualified**, ASTM D6878.

Physical Properties	ASTM Test Method	ASTM D6878 Minimum	EverGuard® Typical Test Data
1. Certain data is provided in MD (machine direction) x CMD (cross machine direction) format. 2. Data is based upon typical product performance, and is subject to normal manufacturing tolerance and variance.			
Nominal Thickness	ASTM D751	0.039" (min.) (0.99 mm)	0.060" (1.52 mm)
Breaking Strength	ASTM D751 Grab Method	220 lbf/in. (38.5 kn/m)	305 lbf x 290 lbf (454 x 432 kg/m)
Factory Seam Strength	ASTM D751	66 lbf (98.34 kg/m)	135 lbf (membrane failure) (201.1 kg/m)
Elongation at Break	ASTM D751	15%	30%
Heat Aging	ASTM D573	90% Retention of Breaking Strength and Elongation at Break	100%
Tear Strength	ASTM D751 8" x 8" (203 x 203 mm) Sample	55 lbf (81.95 kg/m)	75 lbf x 130 lbf (111.8 x 193.7 kg/m)
Puncture Resistance	FTM 101C Method 2031	Not Established	380 lbs. (172 kg)
Cold Brittleness	ASTM D2137	-40°C	-40°C
Permeance	ASTM E96	Not Established	0.08 Perms
Dimensional Change	ASTM D1204 @158°F (70°C), 6 hrs.	+/-1%	0.4%
Water Absorption	ASTM D471 @158°F (70°C), 1 week	+/-3.0% (top coating only)	0.7%
Hydrostatic Resistance	ASTM D751 Method D	Not Established	430 psi
Ozone Resistance	ASTM D1149	No visible deterioration @ 7 x magnification	No visible deterioration @ 7 x magnification
Reflectivity (white) Initial/Aged	ASTM C1549	N/A	0.76/0.68
Emissivity (white) Initial/Aged	ASTM C1371	N/A	0.90/0.83
Weather Resistance	ASTM G155/D6878	10,080 KJ/(m² · nm) at 340 nm	>25,000 KJ/(m² · nm) at 340 nm
Heat Aging	ASTM D573	240°F (115°C) for 32 weeks	60 weeks
Thickness Above Scrim	ASTM D7635	Min 30% of Total Thickness	22.1 mil (Nominal)
Guarantee			
Up to 25 years			

*White, Energy Gray, and Energy Tan Membranes Only
**ENERGY STAR® only valid in the USA

Product Data

Roll Size	Colors	Full Size Roll	Full Roll Weight	Half Roll Size	Half Roll Weight
	Note: Product sizes, dimensions, and widths are nominal values and are subject to normal manufacturing/packaging tolerance and variation.				
	White, Tan, Gray, Energy Tan, Energy Gray	10' x 100' (3.05 x 30.5 m) (1,000 sq. ft. [92.9 sq.m])	322 lbs. (146 kg)	5' x 100' (1.52 x 30.5 m) (500 sq. ft. [46.5 sq.m])	162 lbs. (73.5 kg)
		8' x 100' (2.44 x 30.5 m) (800 sq. ft. [74.3 sq.m])	257 lbs. (117 kg)	4' x 100' (1.21 x 30.5 m) (400 sq. ft. [37.1 sq.m])	128.8 lbs. (58.4 kg)
	Note: Membrane rolls shipped horizontally on pallets, stacked pyramid-style and banded.				
Storage	Store rolls on their sides on pallets or shelving in a dry area.				
Safety Warning	Membrane rolls are heavy. Position and install by at least two people.				

GAF® *Quality You Can Trust... From North America's Largest Roofing Manufacturer!™*

gaf.com

©2015 GAF 9/15 • #342

2 ROOFING MATERIAL SPECIFICATIONS TPO.1
NOT TO SCALE

NEW ATTACHED ADU
STUDIO MODULE
(763B LAKEVIEW AVE.)

763 LAKEVIEW AVE.
SAN FRANCISCO, CA 94112

N

AKD homes
ACCESSORY DWELLING UNITS
WWW.AKDHOMES.COM
EMAIL: DESIGN@AKDHOMES.NET
TEL: 510-314-0564

ISSUANCES

No.	Description	Date
1	PLANNING	5.16.22

Designed By: Janelle Vargas

email: jburnett@disenodesign.net phone: 620-655-8299

SPECIFICATIONS

APPROVED
Dept. of Building Insp.
-San Francisco-
08/06/2024

Drawing Scale: NOT TO SCALE

Job No. PLANS

A-8.0

Top Rated

Kidde

Firex Smoke Detector, Hardwired with 9-Volt Battery Backup & Front Load Battery Door, Adapters Included, Smoke Alarm

★★★★★ (1737) Questions & Answers (147)

Hover Image to Zoom

Share Print

$19.97

- Ionization sensing technology detects invisible fire particles
- Hardwire installation; one 9-volt, alkaline battery backup
- Protection during power outages and no low battery chirps
- See More Details

San Carlos Store

21 in stock Aisle 06, Bay EC2 Text to Me

Pack Size: 1

1 2 36 4

How to Get It Delivering to: 94404 | Change

Store Pickup	Ship to Home	Scheduled Delivery
Pickup Today FREE	Get it by Wed, Jan 19 FREE	As soon as Today Starting at $8.99

21 in stock at San Carlos
Check Nearby Stores

Protect This Item Learn more
Select a Home Depot Protection Plan by Allstate for:

- 2 Year / $3.00
- No thanks

Product Overview

Protect your family with the Kidde Firex Smoke Detector, Hardwired with Battery Backup, Smoke Alarm. The hardwired, ionization Kidde Firex Smoke Detector, Hardwired with Battery Backup, Smoke Alarm operates on a 120-Volt power source with a 9-volt alkaline battery backup. Using ionization sensor technology, the Kidde Firex Smoke Detector alerts to invisible fire particles, even during power outages. The Kidde Firex Smoke Detection provides a kit of hardwire adapters for quick & easy replacement of Firex & First Alert/BRK hardwired smoke alarms. The Kidde Firex Smoke Detector, Hardwired with Battery Backup has green, constant LED light that indicates AC power is connected. Red LED blinking lights flash for standby, if the alarm senses combustion, fire, or smoke, alarm memory if the alarm is activated, and hush mode. UL Certified with a 10-year limited warranty. Meets requirements of UL217, NFPA72, The State of California Fire Marshall, NFPA 101, FHA, & HUD.

- Shop all Kidde fire safety products here
- Explore Kidde curated fire safety kits; all products to protect your home from fire in one package
- Hardwired 120-volt power source with a 9-volt battery back-up
- Easy installation - hardwire adapters included for quick & easy replacement of Firex & First Alert/BRK hardwired smoke alarms
- Test/reset button - tests the smoke alarm circuitry & resets memory after an alarm has sounded
- No low battery chirps; internal timer alerts you to replace the entire unit after 10 years
- 85 decibel fire alarm alerts of fire
- Ionization sensor - detects invisible fire particles (associated with fast flaming fires) sooner than photoelectric sensing alarms
- Constant green LED light indicates that AC power is connected
- Red LED blinking lights indicate when: alarm is in standby mode, smoke or fire initiated the alarm, or is in hush mode
- Replacement Chirp - alerts to replace alarm after 10 years of operation
- Ensure whole home family protection by placing 1 fire detector and carbon monoxide detector on each level of your home, in your bedroom, & other locations where required by law
- Industry experts (such as the NFPA), recommend that both ionization and photoelectric smoke alarms be installed to help ensure maximum detection of the various types of fires that can occur within the home.
- Kidde offers a full range of 120-Volt AC wire-in life safety products with interconnect capability to provide the most immediate and complete system available, when any one interconnected alarm is triggered, all interconnected alarms within the home sound an immediate warning
- Compatible with Kidde, FireX, code one and sentinel products
- *Check with your state and local fire and Building/Safety codes for specific information regarding smoke & Carbon Monoxide Alarms.
- UL/CSFM Ref. Kidde Part i12060A

3 HARDWIRED POWERED SMOKE AND CARBON DETECTOR
1/4" = 1'-0"

Best Seller

MRCOOL

DIY Gen-3 12,000 BTU 22 SEER ENERGY STAR Ductless Mini Split Air Conditioner & Heat Pump w/ 25 ft. Install Kit 115-Volt

★★★★★ (437) Questions & Answers (151)

Hover Image to Zoom

Share Print

$1497.00 /bundle

- Ductless mini AC with a heat pump ensures energy-efficient use
- Includes a pre-charged DIY installation kit
- Wi-Fi module allows for temperature control through smart devices
- See More Details

How to Get It Delivering to: 94404 | Change

Ship to Store	Ship to Home	Scheduled Delivery
Pickup Apr 20 - Apr 25 FREE	Get it by Thu, Apr 21 Standard Delivery	Not available for this item

We'll send up to 776 to Hayward for free pickup
Change Store

- 1 +

Add to Cart

Product Overview

The MrCool DIY 3rd Generation 22 SEER 12,000 BTU/h ENERGY STAR Ductless Heat Pump is designed for simple, amateur installation. Using pre-charged R410A Quick Connect Linesets, anyone with a few common tools on hand can install this innovative ductless system that delivers reliable, ENERGY STAR rated heating and cooling year-round. Enjoy unprecedented control over your heating and cooling through a seamless integration with MrCool's custom smartphone app, Google Assistant, or Amazon Alexa. With the MrCool DIY 3rd Generation Heat Pump, which runs quietly with decibel levels ranging from 23.5 to 38 dB, you can adjust your fan settings to low, medium, or high, direct air flow to your location with the Follow Me Function, or set your unit to Sleep Mode for quiet, efficient heating or cooling throughout the night. This bundle includes: Mounting plate, Anchor, Mounting plate fixing screws, Remote control, Fixing screw for remote controller holder ST2.9 x 10, Remote control holder, Air freshening filter, Seal, Allen wrench, Condensate Drain, Drain joint, Neoprene, Owner & Installation Manual, Remote Control Manual, Smart Controller Kit, Sound deadening pads, Quick Connect line set (refrigerant pipe), Insulation material, Non-Adhesive U.V. Tape.

- Fully able to be controlled with the MrCool SmartHVAC smartphone app or with your Alexa or Google Assistant.
- The Follow Me Function monitors the temperature near the remote and adjusts the unit's function to deliver heating or cooling wherever you might be.
- Quiet operation with nighttime sleep mode will deliver peaceful, efficient heating or cooling all night, allowing this unit to give you first-rate comfort 24/7.
- Kit includes 25 ft. pre-charged do-it-yourself installation kit
- 7-year compressor warranty and 5-year parts warranty
- Smart functions include Auto Restart for instant operation after a power outage and louver position memory, so you don't have to remember where the louver was when you shut your unit off.
- Supplies low ambient cooling down to an outside temperature of 5°F, which is perfect for server rooms, greenhouses, and other locations that need to be cooled all year long.
- MRCOOL units are protected by Gold Fin standard corrosion resistance and an alarm for low coolant levels and leaks.
- Energy Star rated for certified efficiency.
- Click here for more information on Electronic Recycling Programs
- Return Policy
- California residents see Prop 65 WARNINGS

Info & Guides

- Energy Guide
- Specification
- Product Brochure
- Warranty
- Installation Guide
- Use and Care Manual
- Return Policy

You will need Adobe® Acrobat® Reader to view PDF documents. Download a free copy from the Adobe Web site.

2 MINI SPLIT SYSTEM
1/4" = 1'-0"

A. O. Smith | COMMERCIAL-GRADE RESIDENTIAL ELECTRIC WATER HEATERS

VOLTEX® HYBRID ELECTRIC HEAT PUMP WATER HEATER

The Voltex Hybrid Electric heat pump water heater from A. O. Smith is the most cost effective energy-efficient option available for consumers who want to save money on their utility bills. Voltex can reduce water heating costs up to 73% and provide payback in 2-3 years. With annual savings of $306 or more, there is no better way to go green than Voltex.

HOW DO THEY WORK?

Absorb ambient heat from the surrounding air to heat water using a compressor and "Environmentally-Friendly" R134a refrigerant

- Self-contained heat pump unit is integrated into the top of the tank
- Multiple operating modes to maximize efficiency and performance

QUALIFIES FOR MANY STATE AND LOCAL UTILITY REBATES - CHECK WWW.DSIREUSA.ORG

INCREASED ENERGY EFFICIENCY

- Improved efficiency designed in, to ensure available hot water at the lowest possible cost. Up to a 3.45 Uniform Energy Factor (UEF) Rating conserves energy and meets ENERGY STAR® qualifications

CHOICE OF OPERATING MODES

- Select from Efficiency, Hybrid, or Electric modes to match heating requirements to environmental conditions.
- Hybrid mode automatically adjusts between compressor and element, depending upon heat requirements.
- Vacation mode reduces operating costs and provides freeze protection during extended absence

BACKUP ELECTRIC ELEMENTS

- Long-lasting backup heating elements help heat water according to environmental conditions, demand, and the chosen operating mode

COREGARD™ ANODE ROD

- Our anode rods have a stainless steel core that extends the life of the anode rod allowing superior tank protection far longer than standard anode rods
- 66 and 80 gallon models have dual anodes for added protection.

DRY FIRE PROTECTION

- Control system checks to ensure the tank is full of water during start up to prevent dry firing the heating elements

ELECTRONIC USER INTERFACE

- User-friendly electronic interface allows easy control of temperature setting, operating mode, and communicates diagnostics
- Easy to read temperature display (see back) shows temperature in °F or °C
- Advanced diagnostics convey error messages for service purposes. The last four error messages are saved in the control system memory.

OTHER FEATURES

- Ideal for basements or garage installations; the compressor transfers heat to the water while dehumidifying and cooling the ambient air
- Washable air filter is easily removed for routine cleaning

OPTIONAL AIR DUCT ADAPTER KIT

- Permits installation in confined spaces

TEN YEAR LIMITED WARRANTY

- For complete information, consult written warranty or go to hotwater.com

LISTED

AHRI CERTIFIED® www.ahridirectory.org

© April 2019 A. O. Smith Corporation. All Rights Reserved
www.hotwater.com | 800-527-1953 Toll-Free USA | A. O. Smith Corporation | 500 Tennessee Waltz Parkway | Ashland City, TN 37015

A. O. Smith | COMMERCIAL-GRADE RESIDENTIAL ELECTRIC WATER HEATERS

Model Number	Nominal Capacity	Rated Storage Volume	UEF	First Hour Rating (Gallons)	Dimensions in Inches					Approx. Shipping Weight (lbs)	Warranty Term
					A	B	C	D	E		
HPTU-50N	50	46	3.45	66	63	22	40-5/8	3-3/4	40-1/2	196	10
HPTU-66N	66	67	3.45	79	61	27	38	4	38	289	10
HPTU-80N	80	82	3.45	86	69	27	46	4	46	307	10

Requires 30 amp breaker.
Top T&P option not available.

ELECTRONIC USER INTERFACE

- User friendly, easy to read display.
- LEDs clearly indicate the current operating mode.
- Easily select operating mode:
  - Efficiency
  - Hybrid
  - Electric
  - Vacation
- Display communicates current status, mode and set point, and displays error messages when applicable.

EFFICIENCY MODE

- Utilizes the heat pump for all water heating.
- Automatically reverts to heating element if ambient air or water temperatures are outside optimal operating range for heat pump.

HYBRID MODE

- Utilizes the heat pump or heating element, depending on demand.

ELECTRIC MODE

- Standard electric water heater operation.

VACATION MODE

- One touch operation maintains tank temperature of 60°F (15.6°C) during vacation or extended absence to reduce operating costs and provide freeze protection.
- Programmable up to 99 days.

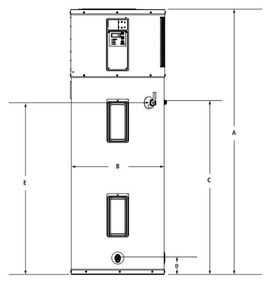

OTHER FEATURES:

- Sacrificial anode to protect against tank corrosion.
- Environmentally-friendly non-CFC foam insulation.
- Durable, enhanced-flow brass drain valve.
- CSA certified and ASME rated temperature & pressure relief valve.

OPERATING REQUIREMENTS:

- Requires provision for condensate draining; if a suitable drain is not available, a condensate pump is required.
- 208/240 VAC 60Hz single phase 30 amp power supply.

For Technical Information, call 800-527-1953. A. O. Smith Corporation reserves the right to make product changes or improvements without prior notice.

© April 2019 A. O. Smith Corporation. All Rights Reserved
www.hotwater.com | 800-527-1953 Toll-Free USA

1 WATER HEATER SPECIFICATION.
NOT TO SCALE

NEW ATTACHED ADU
STUDIO MODULE
(763B LAKEVIEW AVE.)

763 LAKEVIEW AVE.
SAN FRANCISCO, CA 94112

AKD homes

ACCESSORY DWELLING UNITS

WWW.AKDHOMES.COM
EMAIL: DESIGN@AKDHOMES.NET
TEL: 510-314-0564

ISSUANCES

No.	Description	Date
1	PLANNING	5.16.22

Designed By: Janelle Vargas

email: jburnett@dlsenodesign.net phone: 620-655-8299

SPECIFICATIONS

APPROVED
Dept. of Building Insp.
-San Francisco-
08/06/2024

Drawing Scale: 1/4" = 1'-0"

Job No. PLANS

A-8.1

24" Pull-Out Hood

500 Series – Stainless Steel HUI54452UC

BOSCH Invented for life

HUI54452UC
Stainless Steel

This sleek visor hood allows the user to close the hood when not in use.

Features & Benefits
Touch controls with LCD display.
400 CFM integrated blower included.
Four speed touch controls with LCD display.
Dishwasher safe aluminum mesh filters.
Converts to recirculation mode with accessory kit (separate purchase required).

General Properties	
Operating mode	Convertible: ducted / recirculating
Maximum CFM	400 CFM
Sones	5.5 HS / 1.3 WS
Number of speed settings	4-stage
Motor location	Integrated motor in hood body
Number of lights	2
Bulb type	LED
Light lumens	235
Light color (°K)	3000
Total power of the lamps (W)	4.2 W
Damper included	Yes
Grease filter material	Aluminum
Grease filter type	Multilayer cassette
Technical Details	
Volts (V)	120 V
Frequency (Hz)	60 Hz
Plug type	120V-3 Prong
Power cord length (in.)	40 1/2"

Dimensions & Weight	
Overall appliance dimensions (width of canopy included) (HxWxD) (in.)	11 13/16" x 23 9/16" x 11 13/16"
Required distance above cooktop / range cooking surface	Min. 24" electric / 29 1/2" gas
Diameter of air duct (in.) top	6"
Net weight (lbs)	24 lbs
Accessories – Optional	

HVRECSUC
Recirculation kit

Accessories: To purchase Bosch accessories, cleaners & parts please visit www.bosch-home.com/us/store or call 1-800-944-2904 (Mon to Fri 5 am to 6 pm PST, Sat 6 am to 3 pm PST).
Notes: All height, width and depth dimensions are shown in inches. BSH reserves the absolute and unrestricted right to change product materials and specifications, at any time, without notice. Consult the product's installation instructions for final dimensional data and other details prior to making cutout.
Warranties: Please see Use & Care manual or Bosch website for statement of limited warranty.
For more information on our entire line of products, go to www.bosch-home.com/us or call 1-800-944-2904
© BSH Home Appliances Corporation. All rights reserved. Bosch is a registered trademark of Robert Bosch GmbH.

11/19

24" Pull-Out Hood

500 Series – Stainless Steel HUI54452UC

BOSCH Invented for life

Installation Details

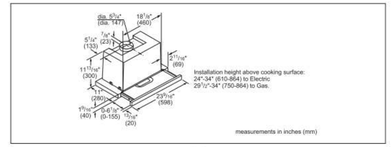

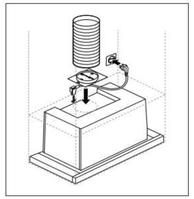

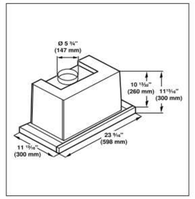

Accessories: To purchase Bosch accessories, cleaners & parts please visit www.bosch-home.com/us/store or call 1-800-944-2904 (Mon to Fri 5 am to 6 pm PST, Sat 6 am to 3 pm PST).
Notes: All height, width and depth dimensions are shown in inches. BSH reserves the absolute and unrestricted right to change product materials and specifications, at any time, without notice. Consult the product's installation instructions for final dimensional data and other details prior to making cutout.
Warranties: Please see Use & Care manual or Bosch website for statement of limited warranty.
For more information on our entire line of products, go to www.bosch-home.com/us or call 1-800-944-2904
© BSH Home Appliances Corporation. All rights reserved. Bosch is a registered trademark of Robert Bosch GmbH.

11/19

2 KITCHEN HOOD SPECIFICATION3
NOT TO SCALE

CR6™

Product Specifications

CREE TRUEWHITE® TECHNOLOGY
A revolutionary way to generate high-quality white light, Cree TrueWhite® Technology mixes the light from the highest performing red and unsaturated yellow LEDs. This patented approach delivers an exclusive combination of 90+ CRI, beautiful light characteristics, and lifelong color consistency, all while maintaining high luminous efficacy—a true no compromise solution.

CONSTRUCTION & MATERIALS
- Durable upper housing protects LEDs, driver and power supply. Adjustable flip clips resist heat while providing retention for flush ceiling fit.
- Thermal management system uses both upper housing and lower reflector to conduct heat away from LEDs and transfer it to the plenum space for optimal performance. LED junction temperatures stay below specified maximum even when installed in insulated ceilings.
- Suitable for insulated and non-insulated ceilings.
- One-piece aluminum lower reflector redirects light while also conducting heat away from LEDs. It creates a comfortable visual transition from the lens to the ceiling plane and easily accommodates CT6 snap-in trims.

OPTICAL SYSTEM
- Unique combination of reflective and refractive optical components achieves a uniform, comfortable appearance while eliminating pixelation and color fringing. This ensures smooth light patterns are projected with no hot spots and minimal striations.
- Components work together to optimize distribution, balancing the delivery of high illuminance levels on horizontal surfaces with an ideal amount of light on walls and vertical surfaces. This increases the perception of spaciousness.
- Diffusing lens shields direct view of LEDs while lower reflector balances brightness of lens with the ceiling to create a low-glare high angle appearance.

ELECTRICAL SYSTEM
- Integral, high-efficiency driver and power supply.
- **Power Factor** > 0.9
- **Input Voltage**: 120V, 60Hz
- **Dimming**: Dimmable to 5% with most incandescent dimmers. Reference www.cree.com/lighting for recommended dimmers.

REGULATORY & VOLUNTARY QUALIFICATIONS
- ENERGY STAR® qualified.
- cULus Listed
- Exceeds California Title-24 high efficacy luminaire requirements.
- Suitable for wet locations.

Photometry

CR6 BASED ON ONSPEX REPORT #: 30014047-3
CR6-625L: MULTIPLY BY 0.78

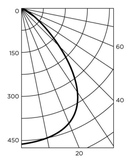

Zonal Lumen Summary

Zone	Lumens	% Lamp	% Fix
0-30	336	42.10%	42.10%
0-40	516	64.60%	64.60%
0-60	724	90.60%	90.60%
0-90	800	100%	100%

Intensity (Candlepower) Summary

Angle	Mean CP
0°	456
5°	453
15°	432
25°	386
35°	293
45°	174
55°	85
65°	42
75°	25
85°	6
90°	0

Reference www.cree.com/lighting for detailed photometric data.

Installation

- Designed to easily install in standard 6" downlight housings from Cree and other manufacturers.*
- Quick install system utilizes a unique retention feature. Simply attach socket to CR6. Move light to ready position and slide into housing.

NOTE: Reference www.cree.com/lighting for detailed installation instructions.

*Reference www.cree.com/lighting for a list of compatible housings.

Application Reference

Open Space					
Spacing	Lumens	Wattage	LPW	w/ft²	Average FC
4' x 4'	625	9.5	61	0.60	36
6' x 6'				0.28	18
8' x 8'				0.15	10
10' x 10'				0.10	7
4' x 4'	800	12	67	0.76	47
6' x 6'				0.35	22
8' x 8'				0.19	13
10' x 10'				0.13	8

10' Ceiling, 80/50/20 Reflectances, 2.5 workplane.
LLF: 1.0 Initial. Open Space: 50' x 40' x 10'

Corridor					
Spacing	Lumens	Wattage	LPW	w/ft²	Average FC
4' on Center	625	9.5	61	0.40	13
6' on Center				0.27	9
8' on Center				0.20	7
10' on Center				0.17	6
4' on Center	800	12	67	0.51	17
6' on Center				0.34	11
8' on Center				0.25	8
10' on Center				0.21	7

10' Ceiling, 80/50/20 Reflectances, Light levels on the ground.
LLF: 1.0 Initial. Corridor: 6' Wide x 100' Long

© 2013 Cree, Inc. All rights reserved. For informational purposes only. See www.cree.com/patents for patents that cover these products. Cree®, and the Cree logo are registered trademarks, and CR6™ is a trademark of Cree, Inc. ENERGY STAR® and the ENERGY STAR logo are registered trademarks of the U.S. Environmental Protection Agency. The UL logo is a registered trademark of UL LLC.

CREE

US: www.cree.com/lighting T (800) 236-6800 F (262) 504-5415

Canada: www.cree.com/canada T (800) 473-1234 F (800) 890-7507

CR6™

Six-Inch LED Downlight

Product Description

The CR6™ LED downlight delivers up to 800 lumens of exceptional 90+ CRI light while achieving up to 67 lumens per watt. This breakthrough performance is achieved by combining the high efficacy and high-quality light of Cree TrueWhite® Technology. The CR6 is available in a warm color temperature and has a variety of trim options. It easily installs into most standard six-inch recessed IC or non-IC housings, making the CR6 perfect for use in both residential and light commercial, new construction or retrofit, applications.

Performance Summary

- Utilizes Cree TrueWhite® Technology
- **Delivered Light Output**: 625, 800 lumens
- **Input Power**: 9.5, 12 watts
- **CRI**: 90
- **CCT**: 2700K, 3000K, 3500K, 4000K
- **Warranty**: 5 years†
- **Lifetime**: Designed to last 50,000 hours
- **Dimming**: Dimmable to 5%*

CR6™

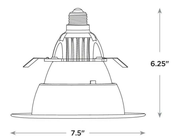

Housings & Accessories

Reference Housing & Accessory documents for more details.

Trims & Reflectors
CT6A Diffuse silver reflector
CT6AW Diffuse wheat reflector
CT6AB Diffuse black reflector
CT6BB Flat black flange and reflector

Housings (GU24 Only)	
H6 Architectural	**SC6** Cylindrical Surface Mount
RC6 New Construction	**SC6-CM** Cylindrical Cord Mount
RR6 Retrofit	**SC6-WM** Cylindrical Wall Mount

Ordering Information

Example: CR6-800L-27K-12-E26

CR6									
Series	Size		Source Lumen Output		CCT		Voltage		Base Type
CR	6	6 inch	625L	625 Lumens	27K	2700K	12	120 Volts	E26 Edison Base
					30K	3000K			GU24 GU24 Base (Title 24 Compliant)
					35K	3500K			
					40K	4000K			
CR	6	6 inch	800L	800 Lumens	27K	2700K	12	120 Volts	E26 Edison Base
					30K	3000K			GU24 GU24 Base (Title 24 Compliant)
					35K	3500K			
					40K	4000K			

* Reference www.cree.com/lighting for recommended dimmers.
† See www.cree.com/lighting for warranty terms.

CREE TRUEWHITE TECHNOLOGY

Rev. Date 05/15/2013

US: www.cree.com/lighting T (800) 236-6800 F (262) 504-5415

Canada: www.cree.com/canada T (800) 473-1234 F (800) 890-7507

3 RECESSED LED LIGHTS SPECIFICATIONS.
NOT TO SCALE

WhisperSense DC
VENTILATION FAN

FV-0511VQC1

Specification Submittal Data / Panasonic Precision Spot Ventilation Fan with Dual Sensor Technology

Description
Ventilating fan shall be low noise ceiling mount type rated for continuous operation. Fan shall be ENERGY STAR® rated and certified by the Home Ventilating Institute (HVI). Evaluated by the Underwriters Laboratories and conform to both UL and cUL standards.

Motor/Blower:
- Enclosed brushless ECM motor technology rated for continuous run.
- Fan ventilation rates shall be manually adjustable for 50-80-110 CFM.
- Power rating shall be 120 volts and 60 Hz.
- Fan shall be UL and cUL listed for tub/shower enclosure when GFCI protected.
- Motor equipped with thermal-cutoff fuse.
- Removable with permanently lubricated plug-in motor.

Housing:
- 26 gauge Zinc-Aluminum-Magnesium (ZAM) housing.
- Integrated dual 4" or 6" diameter duct adapter.
- Built-in damper reduces back-drafting and helps with blower door testing.
- Built-in metal flange provides blocking for penetrations through drywall as an Air Barrier, and assists with the decrease in leakage in the Building Envelope during blower door testing.
- Articulating and expandable installation bracket up to 24".

Ceiling Radiation Damper:
- Whispersense DC is UL listed for use with the Panasonic Ceiling Radiation Damper (Model #: PC-RDDSCS, sold separately).

Grille:
- Attractive design using Poly Pro material.
- Attaches directly to housing with torsion springs

Warranty:
- ECM Motor: 6 Years from original purchase date.
- ALL Parts: 5 Years from original purchase date.

Architectural Specifications:
Ventilation fan shall be UL and cUL listed for ceiling mount and tub/shower enclosure when GFCI protected. Fan shall also be ENERGY STAR® certified, with a built-in speed selector. Choose from 50-80-110 CFM and no more than <0.3/<0.3/<0.3 sone as certified by the Home Ventilating Institute (HVI) at 0.1 static pressure in inches water gauge (w.g.) with no less than 53-83-111 CFM and no more than 0.4/0.6/0.9 sone as certified by HVI at 0.25 w.g. Power Consumption shall be no greater than 4.0/5.8/10.8 watts at 0.1 w.g. and 7.2/10.8/18.4 watts at 0.25 w.g., with efficiency of no less than 12.3/13.8/10.8 CFM/watt at 0.1 w.g. and 7.4/7.7/6.9 CFM/watt at 0.25 w.g. The motor shall be totally enclosed with a brushless ECM motor engineered to run continuously. ECM motor speed shall automatically increase when the fan senses static pressure to maintain selected CFM. Power rating shall be 120V/60Hz. Duct diameter shall be no less than 4", inclusive of an integrated dual 4" or 6" duct adapter. Dual motion and humidity sensors with adjustable delay off timer that can be set from 30 seconds to 60 minutes. Humidity sensor is the rapid rise in relative humidity (RH) type with user-adjusted set points between ~30% to ~80% RH. Fan shall be UL and cUL listed for tub/shower enclosure when GFCI protected. Fan shall be used to comply with ASHRAE 62.2, LEED, ENERGY STAR® (NP, EarthCraft, California Title-24, WA Ventilation Code and CALGreen.

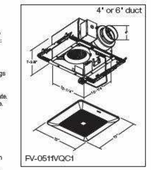

Performance Curve 4" Duct

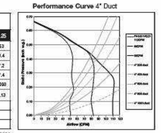

Specifications: WhisperSense DC FV-0511VQC1		4"		4"		4"	
Ventilation Fan Characteristics (HVI Certified Data)	Static Pressure in/sone w.g.	0.1	0.25	0.1	0.25	0.1	0.25
	Air Volume (CFM)	110	111	80	80	50	53
	Noise (sones)	<0.3	0.9	<0.3	0.6	<0.3	0.4
	Power Consumption (watts)	10.6	16.4	5.9	10.8	4.0	7.2
	Energy Efficiency (CFM/Watt)	10.4	6.8	13.6	7.7	12.5	7.4
	Speed (RPM)	967	1230	821	1172	756	1080
	Current (amps)	0.16	0.24	0.11	0.18	0.07	0.12
	MAX. Current (amps)	0.27					
	Power Rating (V/Hz)	120/60					
	ENERGY STAR® rated	Yes					

0.25-Installed Performance

NEW ATTACHED ADU
STUDIO MODULE
(763B LAKEVIEW AVE.)

763 LAKEVIEW AVE.
SAN FRANCISCO, CA 94112

AKD homes
ACCESSORY DWELLING UNITS
WWW.AKDHOMES.COM
EMAIL: DESIGN@AKDHOMES.NET
TEL: 510-3140564

ISSUANCES

No.	Description	Date
1	PLANNING	5.16.22

Designed By: Janelle Vargas

email: jburnett@disenodesign.net phone: 620-655-8299

SPECIFICATIONS

APPROVED
Dept. of Building Insp.
-San Francisco-
08/06/2024

Drawing Scale: As indicated

Job No. PLANS

A-8.2

1 BATHROOM FAN SPECIFICATION.
NOT TO SCALE

ID Infinity Drain

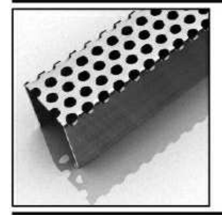

S-DG 38 Series
SITE SIZABLE PVC

- S-DG 3848 - 48" Complete Kit
- S-DG 3860 - 60" Complete Kit
- S-DG 3896 - 96" Complete Kit

Features
- Modify length and outlet location on site
- Indoor or outdoor use
- PVC Channel
- 16 gauge, 304L stainless steel perforated grate
- Works with 2" clamp down floor with 2" throat/strainer size *(not included)*
- NOT INTENDED for installation across a barrier-free threshold
- Compatible with: PVC Liner, Rubber Liner (Chloraloy ®), Hot Mop, Lead Pan, Copper Pan, or Fiberglass
- Flow rate - 9 gpm per outlet
  - Flow rate measured at outlet only. Measurement does not account for water in channel or sheeting on shower floor.
  - Additional outlets can be added and combined into a larger waste line to increase flow rates

Installation

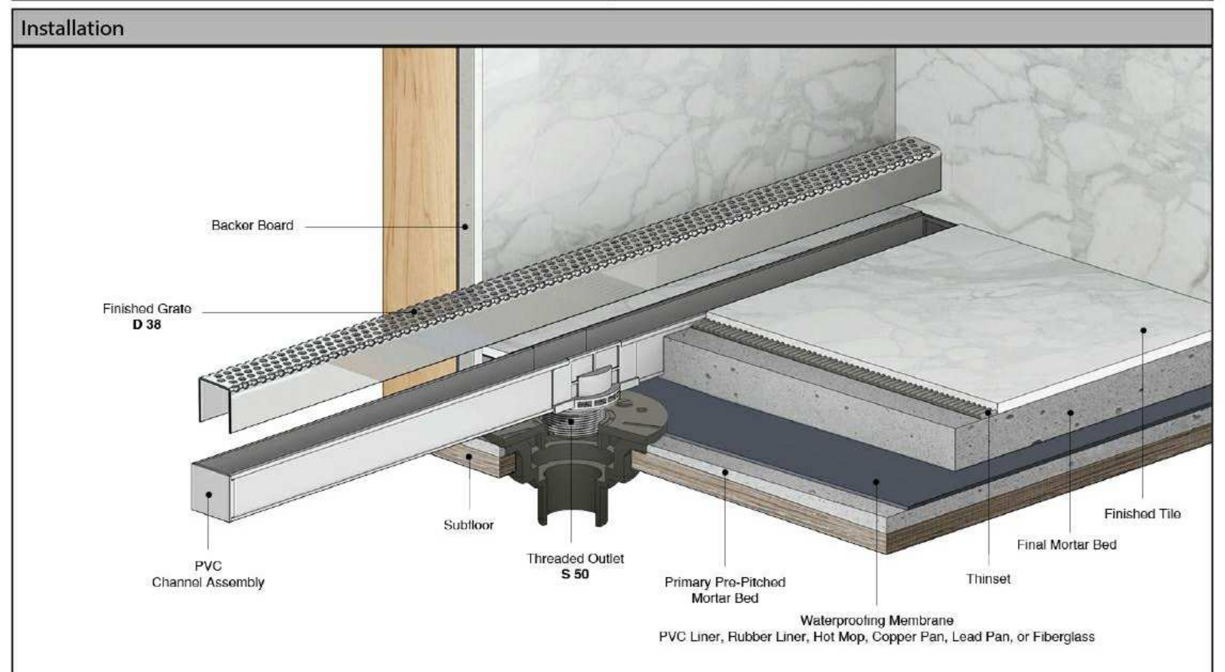

Care & Maintenance
S-DG 38 stainless steel linear drain top grates are made of 304L stainless steel. This material is non-porous, hygienic, rust-free and extremely durable. Bar Keepers Friend® and Soft Scrub® are commonly available products that can be used to protect and clean your Satin Stainless drain cover. For stains that have been left for an excessive amount of time, stronger cleaning agents such as Compound 302® may be needed. For Polished Stainless and other finishes we recommend a mild soap and a soft cloth for cleaning. DO NOT use any abrasive cleaners, scrub pads or allow household cleaning agents, such as bleach, to sit on the drain cover for a long period of time. Stainless steel does not rust. External factors, such as contamination from other highly ferrous metals, built up road salt, sea salt, or chlorine may have caused "surface" rust which can be removed using Barkeepers Friend®, Soft Scrub® with Bleach, or Compound 302® . Always follow the directions on the bottle. Follow proper maintenance procedures to prevent excessive surface rust. In areas of frequent exposure to salt, chlorine, and other chemical compounds, maintenance of the stainless grates should be performed at least 2-3 times per year.

Infinity Drain
145 Dixon Avnue
Amityville, NY 11701
Phone: 516.767.6786
Fax: 516.740.3066
www.Infinitydrain.com

MADE IN THE USA

ID Infinity Drain
Light Duty

NOTE: Installer must verify all rough-in dimensions prior to installation and consult local and national codes. Conformity and compliance to local and national codes are the responsibility of the installer.

FM011-04-19

Dimensions are subject to manufacturers tolerance and change without notice. We can assume no responsibility for use of superceded or void data.

Page 1 of 4

ID Infinity Drain

S-DG3848 S-DG 3860

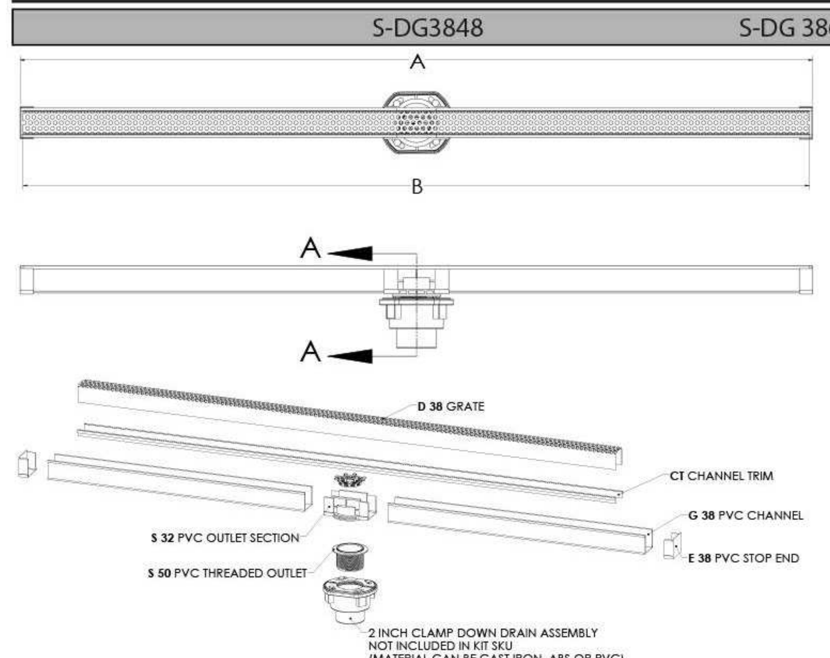

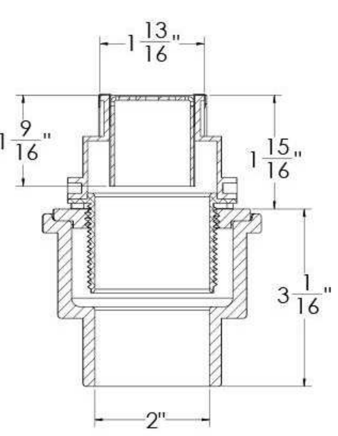

SECTION A-A

	Model Number	Complete Kit Contents	A (Maximum Overall Length)	B (Maximum Grate Length)
☐	S-DG 3848	1 - D 3848 Stainless Steel Grate 1 - G 3848 PVC Channel 2 - E 38 PVC Stop End 1 - S 32 PVC Outlet Section 1 - S 50 PVC Threaded Outlet 1 - HS 2 2" Hair Strainer 2 - CT 48 Channel Trim 1 - DKEY Lift Out Key	48"	47 7/8"
☐	S-DG 3860	1 - D 3860 Stainless Steel Grate 1 - G 3860 PVC Channel 2 - E 38 PVC Stop End 1 - S 32 PVC Outlet Section 1 - S 50 PVC Threaded Outlet 1 - HS 2 2" Hair Strainer 2 - CT 60 Channel Trim 1 - DKEY Lift Out Key	60"	59 7/8"

Finishes
☐ Satin Stainless ☐ Polished Stainless ☐ Oil Rubbed Bronze ☐ Satin Bronze

Infinity Drain
145 Dixon Avnue
Amityville, NY 11701
Phone: 516.767.6786
Fax: 516.740.3066
www.Infinitydrain.com

MADE IN THE USA

ID Infinity Drain
Light Duty

NOTE: Installer must verify all rough-in dimensions prior to installation and consult local and national codes. Conformity and compliance to local and national codes are the responsibility of the installer.

FM011-04-19

Dimensions are subject to manufacturers tolerance and change without notice. We can assume no responsibility for use of superceded or void data.

Page 2 of 4

1 PLUMBING SPECIFICATIONS
1/4" = 1'-0"

IAPMO RESEARCH AND TESTING, INC.
5001 East Philadelphia Street, Ontario, California 91761-2816 – USA • 909-472-4100 • 909-472-4244 • www.iapmort.org

ANSI ACCREDITED ISO/IEC 17065 Product Certification Body #0202 — IAPMO R&T — SCC Accredited CB-P/S OCPS Accrédité CCN

CERTIFICATE OF LISTING

IAPMO Research and Testing, Inc. is a product certification body which tests and inspects samples taken from the supplier's stock or from the market or a combination of both to verify compliance to the requirements of applicable codes and standards. This activity is coupled with periodic surveillance of the supplier's factory and warehouses as well as the assessment of the supplier's Quality Assurance System. This listing is subject to the conditions set forth in the characteristics below and is not to be construed as any recommendation, assurance or guarantee by IAPMO Research and Testing, Inc. of the product acceptance by Authorities Having Jurisdiction.

This certificate is not evidence of current listing. To verify listing status, visit the IAPMO R&T Product Listing Directory at pld.iapmo.org

Effective Date: February 2019 -Rev. 2/19/2019- Void After: February 2024

Product: Commercial and Residential Floor Drains File No. 11455

Issued To: Infinity Drain, Ltd.
145 Dixon Avenue
Amityville, NY 11701

Identification: Manufacturer's name or trademark, and load specification. Markings shall appear on the grate, cleanout cover, or top rim (as applicable) and on the body, and shall be legibly marked. The marking shall be accomplished by use of a permanent mark or by placing a permanent label on the product. Product shall also bear the cUPC® certification mark.

Characteristics: Floor and general-purpose drains with Metal, ABS, and PVC components to be installed in accordance with the manufacturer's instructions and the latest edition of the Uniform Plumbing Code® and the National Plumbing Code of Canada. The grate free area shall meet the minimum dimensions per ASME A112.6.3 with respect to the outlet connection size.

Products listed on this certificate have been tested by an IAPMO R&T recognized laboratory. This recognition has been granted based upon the laboratory's compliance to the applicable requirements of ISO/IEC 17025.

Products are in compliance with the following code(s):
Uniform Plumbing Code (UPC®)

Chairman, Product Certification Committee — CEO, The IAPMO Group

This listing period is based upon the last date of the month indicated on the Effective Date and Void After Date shown above. Any change in material, manufacturing process, marking or design without having first obtained the approval of the Product Certification Committee, or any evidence of non-compliance with applicable codes and standards or of inferior workmanship, may be deemed sufficient cause for revocation of this listing. Production of or reference to this form for advertising purposes may be made only by specific written permission of IAPMO Research and Testing, Inc. Any alteration of this certificate could be grounds for revocation of the listing. This document shall be reproduced in its entirety.

IAPMO RESEARCH AND TESTING, INC.
CERTIFICATE OF LISTING

-Rev. 2/19/2019- Void After: February 2024

Product: Commercial and Residential Floor Drains File No. 11455

Issued To: Infinity Drain, Ltd.

National Plumbing Code of Canada

Products are in compliance with the following standard(s):
ASME A112.6.3-2016 and CSA B79-2008 (R2013)

KOHLER.

Santa Rosa™
Comfort Height® Compact Toilet
K-3810

Features
- Vitreous china.
- Comfort Height® Compact Elongated bowl.
- AquaPiston® flushing system.
- Includes left-hand polished chrome trip lever.
- 1.28 gpf (4.8 lpf).
- 2-1/8" (54 mm) glazed trapway.
- 12" (305 mm) rough-in.
- Includes Brevia™ Quiet-Close™ seat.
- Less supply.
- 11" (279 mm) x 8-1/8" (206 mm) water area.
- 27-3/4" (705 mm) x 18-3/4" (476 mm) x 28-3/16" (716 mm).
- Floor mount/Floor outlet.

Recommended Accessories
K-75796 Cachet® Nightlight Quiet-Close™ Elongated Toilet Seat
K-8298 C3®-155 Elongated Cleansing Toilet Seat
K-5420 Low-Profile Bolt Caps
K-9169-L Trip lever

Components
Additional included component/s: Tank cover, Trip lever, Bolt cap accessory pack, and Tank accessory pack.

ADA | CSA B651 | OBC

WaterSense Meets EPA Criteria

Codes/Standards
ASME A112.19.2/CSA B45.1
DOE - Energy Policy Act 1992
EPA WaterSense®
ADA
ICC/ANSI A117.1
CSA B651
OBC

KOHLER® One-Year Limited Warranty
See website for detailed warranty information.

Available Color/Finishes
Color tiles intended for reference only.

Color	Code	Description
	0	White
	96	Biscuit
	47	Almond
	NY	Dune
	95	Ice™ Grey
	G9	Sandbar
	7	Black Black™

USA/Canada: 1-800-4KOHLER (1-800-456-4537)
Kohler Co. reserves the right to make revisions without notice to product specifications.
For the most current Specification Sheet, go to www.kohler.com.
7-17-2018 07:14

THE BOLD LOOK OF KOHLER.

KOHLER.

Santa Rosa™
Comfort Height® Compact Toilet
K-3810

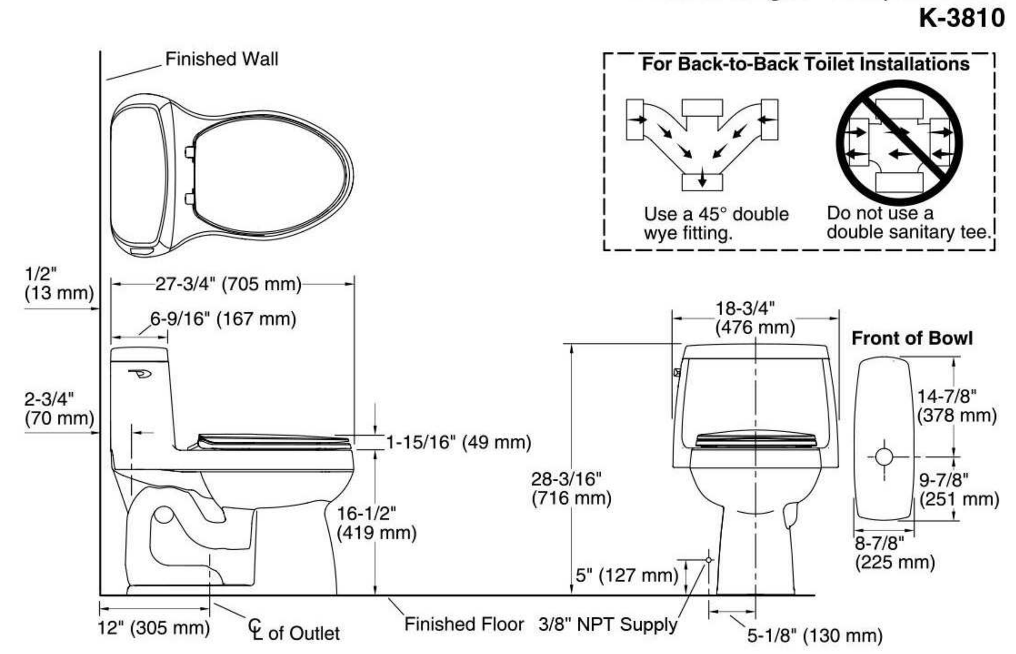

Technical Information
All product dimensions are nominal.

Toilet type:	One-piece, Floor-mount
Waste Outlet:	Floor
Bowl shape:	Compact Elongated front
Flush type:	AquaPiston®
Trap passageway:	2-1/8" (54 mm)
Water Consumption	
Full:	1.28 gpf (4.8 lpf)
Water surface size:	11" x 8-1/8" (279 mm x 206 mm)
Rim to water surface:	6-1/4" (159 mm)
Rough-in:	12" (305 mm)
Seat-mounting holes:	5-1/2" (140 mm)

Notes
Install this product according to the installation instructions.

For back-to-back toilet installations: Use only a 45° double wye fitting.

ADA, OBC, CSA B651 compliant when installed to the specific requirements of these regulations.

Plumbing codes may require elongated toilets and elongated, open-front seats in public bathrooms.

Accessibility standards may require controls to be located on the open side of the toilet.

USA/Canada: 1-800-4KOHLER (1-800-456-4537)
Kohler Co. reserves the right to make revisions without notice to product specifications.
For the most current Specification Sheet, go to www.kohler.com.
7-17-2018 07:14

THE BOLD LOOK OF KOHLER.

hansgrohe

Talis N
HighArc Kitchen Faucet, O-Style 2-Spray Pull-Down, 1.75 GPM
Finishes : **chrome** Part no. : **72800001**

Description
Features
- Swivel range adjustable in 4 steps 60°, 110°, 150° or 360°
- Aerated and needle spray
- Toggle spray diverter
- MagFit magnetic sprayhead docking
- Single-hole installation
- Flow: 1.75 GPM (6.6 L/Min)
- Ceramic cartridge
- ⅜" connections
- Integrated double backflow prevention
- 1 ⅜" Mounting hole required
- Single lever kitchen mixer, connection hoses, Fastening set, Assembly instructions

Item details
List Price $ 550.00

Technology
sBox kitchen — Quick Clean — Comfort Zone

Compliance
ADA — cUPC

Product image

Scale drawing
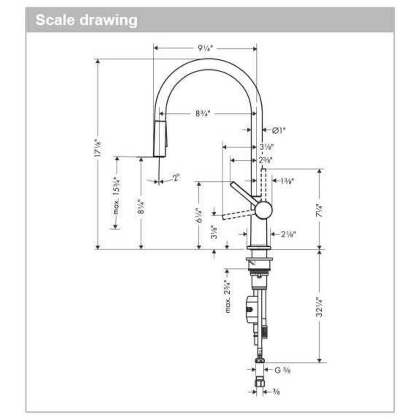

More details are available on our website www.hansgrohe-usa.com We look forward to seeing you
8/19/20

Page 1 / 2

PLUMBING FIXTURES FLOW RATE CHART

FIXTURE	GPM	MODEL/SPECIFICATION
TOILET	1.28 GPF	KOHLER: SANTA ROSA K-3810
SHOWER HEAD	1.8 GPM	GROHE: NEW TEMPESTA COSMOPOLITAN 100 26076002
VANITY FAUCET	1.2 GPM	GROHE: CONCETTO 32138002
KITCHEN FAUCET	1.8 GPM	HANSGROHE: TALIS N 72800001

NEW TEMPESTA
COSMOPOLITAN 100
Shower Rail Set 2 Sprays
MODEL # 26076002

GROHE America, Inc | 200 North Gary Avenue, Suite G, Roselle, IL 60172
Phone: +1 (800) 444-7643 | Fax: +1 (800) 225-2778 | us-customerservice@grohe.com

Pure Freude an Wasser — GROHE

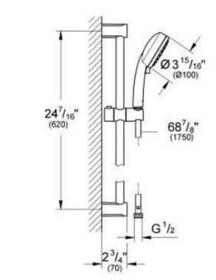

Product Description:
Shower Rail Set 2 Sprays

Standard Specification:
- Consisting of:
- New Tempesta Hand shower (26 046)
- 24" shower bar (27 521)
- RelexaFlex 69" plastic shower hose (28 154)
- **GROHE EcoJoy** 1.75 gpm (6.6 l/min) flow limiter
- **GROHE DreamSpray** perfect spray pattern
- **GROHE StarLight** chrome finish
- **SpeedClean®** anti-lime system
- Inner WaterGuide for a longer life
- Min. recommended pressure: 15 psi

Color:
❑ 26076002 StarLight Chrome

EUROSTYLE COSMOPOLITAN
Single-Handle Bathroom Faucet S-Size
MODEL # 2303600A

Pure Freude an Wasser — GROHE

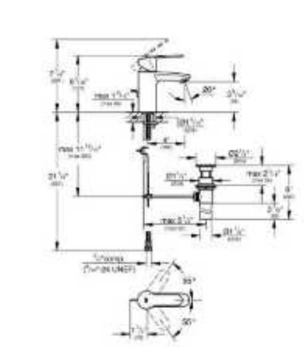

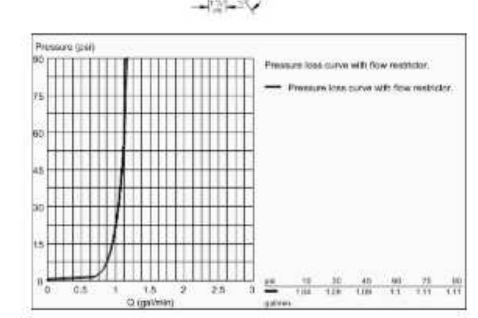

ADA CEC

Product Description:
EUROSTYLE COSMOPOLITAN
Single-Handle Bathroom Faucet S-Size

Standard Specification:
- **GROHE EcoJoy** technology for less water and perfect flow
- Single hole installation
- **GROHE SilkMove** 1.4" (35 mm) ceramic cartridge
- **GROHE StarLight** chrome finish
- Adjustable flow rate limiter
- Pop-up waste set
- Stainless steel flex lines
- **GROHE QuickFix** installation system with centering support
- Optional temperature limiter ref. no. 46 375
- Max flow rate: 1.2 gpm (4.56 L/min)

Applicable Codes & Standards:
- Energy Policy Act of 1992
- NSF 61
- ASME A112.18.1/CSA B125.1
- US Federal and State material regulations
- EPA WaterSense®
- ICC/ANSI A117.1

Color:
❑ 2303600A StarLight Chrome

NEW ATTACHED ADU
STUDIO MODULE
(763B LAKEVIEW AVE.)

763 LAKEVIEW AVE.
SAN FRANCISCO, CA 94112

N

AKD homes
ACCESSORY DWELLING UNITS
WWW.AKDHOMES.COM
EMAIL: DESIGN@AKDHOMES.NET
TEL: 510-314-0564

ISSUANCES

No.	Description	Date
1	PLANNING	5.16.22

Designed By: Janelle Vargas

email: jburnett@disenodesign.net phone: 620-655-8299

SPECIFICATIONS

APPROVED
Dept. of Building Insp.
-San Francisco-
08/06/2024

Drawing Scale: 1/4" = 1'-0"

Job No. PLANS

A-8.3

24" Single Wall Oven

500 Series – Stainless Steel HBE5453UC

BOSCH Invented for life

HBE5453UC
Stainless Steel

The 24" Bosch Wall Oven features Genuine European Convection and is Designed for Kitchens with a Smaller Footprint

General Properties	
Cooking modes	Bake, Broil Plus, Convection Bake, Convection Broil, Convection Broil Plus, Multi-Rack Genuine European Convection, Pie, Warm, Defrost, Frozen Foods
Cleaning type	DualClean®
Telescopic rack	1
Illumination type	Halogen
Interior lights	2
Oven Performance	
Bake / broil element wattages	1,300 / 2,950 W
Convection element wattages	1,700 W
Technical Details	
Watts (W)	3,100 W
Circuit breaker (A)	20 A
Volts (V)	240 / 208 V
Frequency (Hz)	60 Hz
Power cord length (in)	47 1/4"
Plug type	Fixed Connection, No Plug
Energy source	Electric

Dimensions & Weight	
Overall appliance dimensions (HxWxD) (in)	23 5/16" x 23 1/2" x 22 1/2"
Required cutout size – Standard (HxWxD) (in)	22 15/16" – 23 1/16" x 21 15/16" x 22 1/16"
Required cutout size – Flush (HxWxD) (in)	23 9/16" x 23 3/4" x 22 15/16"
Oven cavity size (cu. ft.)	2.8
Overall oven interior dimensions (HxWxD) (in)	15 5/16" x 18 1/4" x 17 5/8"
Usable oven interior dimensions (HxWxD) (in)	14" x 17 1/2" x 16 5/16"
Net weight (lbs)	87 lbs
Accessories–Included	
Included	1 Standard Rack, 1 Telescopic Extension Rail, 1 Enamel Baking Pan

Features & Benefits
Genuine European Convection for even baking results on multiple racks.
Beautifully designed knob controls that are easy to use.
The wall oven is designed to be installed flush with your cabinetry.
Telescopic extension rail accessory offers better access to the oven cavity.
The DualClean® system uses the cavity coating and heat to burn off most grease.

Intertek

Accessories: To purchase Bosch accessories, cleaners & parts please visit www.bosch-home.com/us/store or call 1-800-944-2904 (Mon to Fri 5 am to 6 pm PST, Sat 6 am to 3 pm PST).
Notes: All height, width and depth dimensions are shown in inches. BSH reserves the absolute and unrestricted right to change product materials and specifications, at any time, without notice. Consult the product's installation instructions for final dimensional data and other details prior to making cutout.
Warranties: Please see Use & Care manual or Bosch website for statement of limited warranty.
For more information on our entire line of products, go to www.bosch-home.com/us or call 1-800-944-2904
© BSH Home Appliances Corporation. All rights reserved. Bosch is a registered trademark of Robert Bosch GmbH.
4/20

24" Single Wall Oven

500 Series – Stainless Steel HBE5453UC

BOSCH Invented for life

Installation Details

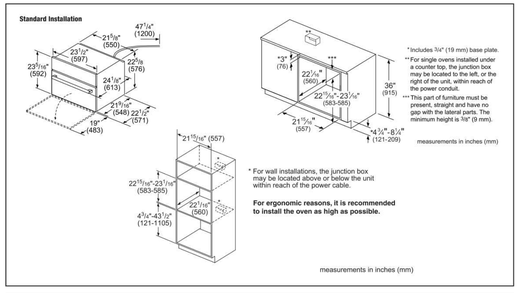

Accessories: To purchase Bosch accessories, cleaners & parts please visit www.bosch-home.com/us/store or call 1-800-944-2904 (Mon to Fri 5 am to 6 pm PST, Sat 6 am to 3 pm PST).
Notes: All height, width and depth dimensions are shown in inches. BSH reserves the absolute and unrestricted right to change product materials and specifications, at any time, without notice. Consult the product's installation instructions for final dimensional data and other details prior to making cutout.
Warranties: Please see Use & Care manual or Bosch website for statement of limited warranty.
For more information on our entire line of products, go to www.bosch-home.com/us or call 1-800-944-2904
© BSH Home Appliances Corporation. All rights reserved. Bosch is a registered trademark of Robert Bosch GmbH.
4/20

4 BOSCH OVEN SPECIFICATIONS
1/4" = 1'-0"

24" Induction Cooktop

500 Series – Black NIT5469UC

BOSCH Invented for life

NIT5469UC
Black

The 24" induction cooktop is engineered to perform precisely and is ideal for kitchens with a smaller footprint.

Features & Benefits
Induction – faster than gas and electric cooktops. Precise cooking, easy cleaning and more efficient
11" cooking zone for larger pots and pans
17 power levels for each cooking zone
Each cooking zone has an independent countdown timer
SpeedBoost® – adds even more power to speed up the cooking process

Element Performance	
Power of Back Left heating element	2,600 W
Power of Back Left heating element (in boost)	3,700 W
Power of Back Right heating element	1,800 W
Power of Back Right heating element (in boost)	3,100 W
Power of Front Right heating element	1,400 W
Power of Front Right heating element (in boost)	2,200 W
Burners with booster	All
Element Size	
Dimension of Back Left heating element	11"
Dimension of Back Right heating element	7"
Dimension of Front Right heating element	6"

Technical Details	
Watts	7,200 W
Circuit breaker	30 A
Volts	208-240 V
Frequency	60 Hz
Plug type	No Plug
Power cord length	37"
Energy source	Electric
Dimensions & Weight	
Overall appliance dimensions (HxWxD)	1/4" +4 1/8" x 24" x 20 9/16"
Required cutout size (HxWxD)	4 1/8" x 22" x 19 1/4"
Minimum distance from counter front	2 1/4"
Minimum distance from rear wall	2"
Net weight	20 lbs
Accessories–Optional	

HEZ390210
8" AutoChef® pan

HEZ390220
9" AutoChef® pan

HEZ390230
10" AutoChef® pan

ADA SB

Accessories: To purchase Bosch accessories, cleaners & parts please visit www.bosch-home.com/us/store or call 1-800-944-2904 (Mon to Fri 5 am to 6 pm PST, Sat 6 am to 3 pm PST).
Notes: All height, width and depth dimensions are shown in inches. BSH reserves the absolute and unrestricted right to change product materials and specifications, at any time, without notice. Consult the product's installation instructions for final dimensional data and other details prior to making cutout.
Warranties: Please see Use & Care manual or Bosch website for statement of limited warranty.
For more information on our entire line of products, go to www.bosch-home.com/us or call 1-800-944-2904
© BSH Home Appliances Corporation. All rights reserved. Bosch is a registered trademark of Robert Bosch GmbH.
10/20

24" Induction Cooktop

500 Series – Black NIT5469UC

BOSCH Invented for life

Installation Details

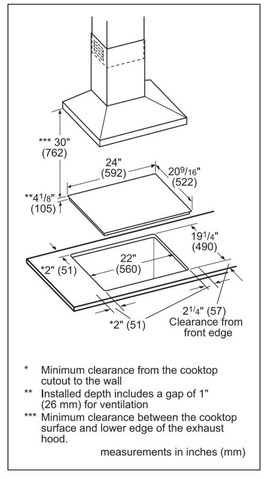

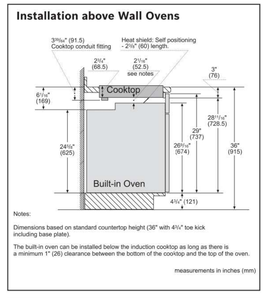

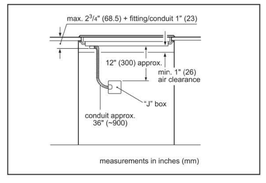

Accessories: To purchase Bosch accessories, cleaners & parts please visit www.bosch-home.com/us/store or call 1-800-944-2904 (Mon to Fri 5 am to 6 pm PST, Sat 6 am to 3 pm PST).
Notes: All height, width and depth dimensions are shown in inches. BSH reserves the absolute and unrestricted right to change product materials and specifications, at any time, without notice. Consult the product's installation instructions for final dimensional data and other details prior to making cutout.
Warranties: Please see Use & Care manual or Bosch website for statement of limited warranty.
For more information on our entire line of products, go to www.bosch-home.com/us or call 1-800-944-2904
© BSH Home Appliances Corporation. All rights reserved. Bosch is a registered trademark of Robert Bosch GmbH.
10/20

3 BOSCH COOKTOP SPECIFICATIONS
1/4" = 1'-0"

24" Compact Condensation Dryer

300 Series – WTG86400UC

BOSCH Invented for life

WTG86400UC
White

The 300 Series dryer is a perfect companion piece to the 300 series washer, matching in quality, performance and design.

Features & Benefits
Condensation drying doesn't require ducting.
Sensitive Condensation Drying System delivers high quality fabric care and complete drying results.
Washer plugs into dryer for easy installation.
The 4.0 cu. ft. drum has large capacity to fit a variety of loads.

c UL us LISTED

General Properties	
Dryer type	Condensing
Drum material	Galvalume
Interior light	No
Ventless drying (no ducting)	Yes
Stackable	Yes with Stacking Kit Accessory
Silence level (dBA)	67
Programs (No.), [Special]	(15), [Jeans, Heavy Duty]
Options (No.), [Special]	(6), [Dry Level, Finished In]
Energy consumption (kWh/yr)	320
ENERGY STAR® qualified	No
Capacity	
Capacity (cu. ft.)	4.0
Design Elements	
Door ring	White
Control type	Touch
Dial	White
Bosch logo on door glass	No
Technical Details	
Energy source	Electric
Watts (W)	2,520
Circuit breaker (A)	30
Volts (V)	208/220-240
Current (A)	10.5
Frequency (Hz)	60
Plug type	240V; NEMA 14-30 (4 prong)
Power cord included	Yes
Power cord length (in)	63 (Full Length)
Drain hose length (in)	78 (Full Length)
Door hinge	Right Side (Not Reversible)

Dimensions & Weight	
Overall appliance dimensions (HxWxD)(in)	33 1/4" x 23 1/2" x 25"
Net weight (lbs)	99
Minimum stack height (in)	67 3/4"
Accessories–Optional	

WTZ11400UC
Stacking kit with shelf

WTZ20410UC
Stacking kit without shelf

WMZ20600
Drying Rack

Accessories: To purchase Bosch accessories, cleaners & parts please visit www.bosch-home.com/us/store or call 1-800-944-2904 (Mon to Fri 5 am to 6 pm PST, Sat 6 am to 3 pm PST).
Notes: All height, width and depth dimensions are shown in inches. BSH reserves the absolute and unrestricted right to change product materials and specifications, at any time, without notice. Consult the product's installation instructions for final dimensional data and other details prior to making cutout.
Warranties: Please see Use & Care manual or Bosch website for statement of limited warranty.
For more information on our entire line of products, go to www.bosch-home.com/us or call 1-800-944-2904
© BSH Home Appliances Corporation. All rights reserved. Bosch is a registered trademark of Robert Bosch GmbH.
05/20

24" Compact Condensation Dryer

300 Series – WTG86400UC

BOSCH Invented for life

Installation Details

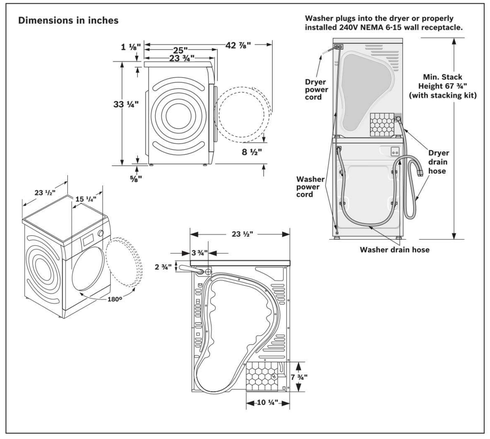

Accessories: To purchase Bosch accessories, cleaners & parts please visit www.bosch-home.com/us/store or call 1-800-944-2904 (Mon to Fri 5 am to 6 pm PST, Sat 6 am to 3 pm PST).
Notes: All height, width and depth dimensions are shown in inches. BSH reserves the absolute and unrestricted right to change product materials and specifications, at any time, without notice. Consult the product's installation instructions for final dimensional data and other details prior to making cutout.
Warranties: Please see Use & Care manual or Bosch website for statement of limited warranty.
For more information on our entire line of products, go to www.bosch-home.com/us or call 1-800-944-2904
© BSH Home Appliances Corporation. All rights reserved. Bosch is a registered trademark of Robert Bosch GmbH.
05/20

2 BOSCH DRYER SPECIFICATIONS
1/4" = 1'-0"

24" Pull-Out Hood

500 Series – Stainless Steel HUI54452UC

BOSCH Invented for life

HUI54452UC
Stainless Steel

This sleek visor hood allows the user to close the hood when not in use.

Features & Benefits
Touch controls with LCD display.
400 CFM integrated blower included.
Four speed touch controls with LCD display.
Dishwasher safe aluminum mesh filters.
Converts to recirculation mode with accessory kit (separate purchase required).

General Properties	
Operating mode	Convertible: ducted / recirculating
Maximum CFM (blower)	400 CFM
CFM (HVI)	290 HS / 110 WS
Sones (HVI)	6 HS / 0.6 WS
Number of speed settings	4-stage
Motor location	Integrated motor in hood body
Number of lights	2
Bulb type	LED
Light lumens	235
Light color (°K)	3000° K
Total power of the lamps	4.2 W
Damper included	Yes
Grease filter material	Aluminum
Grease filter type	Multilayer cassette
Technical Details	
Watts	199 W
Volts	120 V
Frequency	60 Hz
Plug type	120V-3 Prong
Power cord length	45 1/2"

c UL us

Dimensions & Weight	
Overall appliance dimensions (width of canopy included) (HxWxD)	11 13/16" x 23 9/16" x 11 13/16"
Minimum distance above cooktop / range cooking surface	Min. 24" electric / 29 1/2" gas
Diameter of air duct top	6"
Net weight	24 lbs
Accessories – Optional	

HVREC5UC
Recirculation kit

HS=High Speed; WS=Working Speed

Accessories: To purchase Bosch accessories, cleaners & parts please visit www.bosch-home.com/us/store or call 1-800-944-2904 (Mon to Fri 5 am to 6 pm PST, Sat 6 am to 3 pm PST).
Notes: All height, width and depth dimensions are shown in inches. BSH reserves the absolute and unrestricted right to change product materials and specifications, at any time, without notice. Consult the product's installation instructions for final dimensional data and other details prior to making cutout.
Warranties: Please see Use & Care manual or Bosch website for statement of limited warranty.
For more information on our entire line of products, go to www.bosch-home.com/us or call 1-800-944-2904
© BSH Home Appliances Corporation. All rights reserved. Bosch is a registered trademark of Robert Bosch GmbH.
10/21

24" Pull-Out Hood

500 Series – Stainless Steel HUI54452UC

BOSCH Invented for life

Installation Details

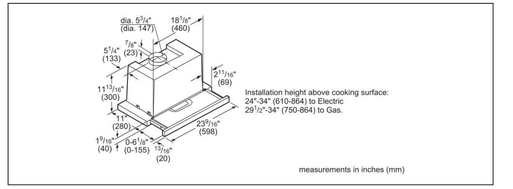

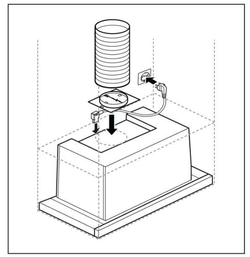

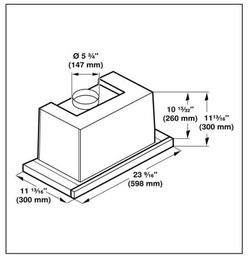

Accessories: To purchase Bosch accessories, cleaners & parts please visit www.bosch-home.com/us/store or call 1-800-944-2904 (Mon to Fri 5 am to 6 pm PST, Sat 6 am to 3 pm PST).
Notes: All height, width and depth dimensions are shown in inches. BSH reserves the absolute and unrestricted right to change product materials and specifications, at any time, without notice. Consult the product's installation instructions for final dimensional data and other details prior to making cutout.
Warranties: Please see Use & Care manual or Bosch website for statement of limited warranty.
For more information on our entire line of products, go to www.bosch-home.com/us or call 1-800-944-2904
© BSH Home Appliances Corporation. All rights reserved. Bosch is a registered trademark of Robert Bosch GmbH.
10/21

1 BOSCH HOOD SPECIFICATIONS
1/4" = 1'-0"

NEW ATTACHED ADU
STUDIO MODULE
(763B LAKEVIEW AVE.)

763 LAKEVIEW AVE.
SAN FRANCISCO, CA 94112

AKD homes

ACCESSORY DWELLING UNITS

WWW.AKDHOMES.COM
EMAIL: DESIGN@AKDHOMES.NET
TEL: 510-3140564

ISSUANCES

No.	Description	Date

Designed By: Janelle Vargas

email: jburnett@disenodesign.net phone: 620-655-8299

APPLIANCE SPECS

APPROVED
Dept. of Building Insp.
-San Francisco-
08/06/2024

Drawing Scale: 1/4" = 1'-0"

Job No. PLANS

A-8.4

STRUCTURAL SPECIFICATIONS

GENERAL

- These notes are general and apply to the entire project except where there are specific indications to the contrary. Construction shall meet the requirements of the latest edition of the 2019 California Building Code. The above shall govern except where other applicable codes or the following notes are more restrictive.
- Structures have been designed for operational loads on completed structures. During construction, structures and parts of the structures shall be protected and/or supported by bracing and shoring wherever excessive loading may occur.
- The contractor alone is responsible for job site safety. Site review of the construction by the Architect and/or Engineer, if any, is to determine conformance with the plans and specifications. It does not encompass safety procedures or operations.
- It is the responsibility of the Contractor and Subcontractor to notify the Owner and the Architect and/or Engineer of any conditions to be found in the field to be different from those shown on the plans, or of errors or omissions on the plans, which might affect the completion of the project.
- Lay out all structural work by referring to dimensions and elevation notes on the architectural plans. Do not scale structural drawings. Work details dimensions form the controlling surface points and actual material dimensions.
- Larger scale details take precedence over smaller scale details.
- Verify type and size of metal work against appropriate member size before ordering hardware.
- Hardware notes is Simpson "Strong Tie". Hardware of similar construction and equal ICC values is acceptable.
- For hardware use the maximum size bolts and nails specified in manufacturer's catalog. Nail all holes. Use special short-length nails supplied by manufacturer where common nails will exceed the width of the framing member.
- In case of conflict between structural and architectural plans, details, and/or specifications, the more restrictive condition shall apply and notify applicable parties.

CONCRETE

- All concrete work shall conform to the requirements of the latest edition of the ACI building Code (ACI-318) and the California Building Code (CBC). Detailing, fabrication, and erection of reinforcing bars shall be in accordance with the latest edition of the Manual of Standard Practices (ACI-315).
- Aggregate for the concrete mix shall conform to ASTM-C33. Cement shall conform to ASTM-C150, Type I or II.
- Concrete shall have an ultimate compressive strength of 3000 psi (28 day strength) with a 4" slump (tolerance 1").Design with 2500 psi (Special Inspection NOT required).
- Reinforcing steel shall be deformed bars (ASTM A615) Grade 40, except that No. 4 or larger bars shall be Grade 60. Welded wire fabric shall be per ASTM 185. Reinforcing steel in grade beams shall be securely fastened in place horizontally and vertically prior to pouring.
- Lap bars 48 diameters at splices. Hook bars 24 diameters at corners.
- Bend down top bars at ends of grade beams, such as at garage doors.
- Provide a minimum of two anchor bolts per sill piece, with one within 12" of each end.
- Concrete floor shall be screeded, wood floated and then given a steel trowel finish.
- Provide foundation vents equal in area to 1/150 of underfloor area. Locate vents on opposing sides where possible

WOOD

- Unless otherwise noted, framing lumber shall be graded as follows:
  Framing lumber (rafters, joists, purlins, etc.): DF No.2
  Beams headers and post: DF. No. 1
  Studs: Stud grade
  Foundation sills: Pressure-treated (DF)
  Exposed decking: California Redwood No.1
- Moisture content of all structural lumber shall be less than 19 percent.
- All Plywood shall be CDX OR OSB U.O.N. Minimum thickness shall be 1/2" on roof, 3/4" T & G on floor and 1/2" on walls (where noted). Use panel clips at unsupported edges of built-up roofs. Minimum span of plywood sheathing in each direction shall not be less than 24".
- Glu-lam beams shall be Grade 24F-V4, standard camber (AITC-103) U.O.N. Provide compliance certificate to building Department. Glu-lam beams shall have metal hardware connections to posts (BC post cap minimum).

FRAMING

- All framing shall conform to chapter 23 of the 2019 California Building Code. Nailing shall be per CBC Table 2304.10.1. All nails and hardware exposed to the weather shall be galvanized. Nails shall be common wire nails U.O.N.
- All bolts for wood connections shall be conform to ASTM A307 with heavy hex heads. Malleable iron washer shall be used at all places where the bolt head or nut would otherwise bear or be in contact with the wood surface. Bolt holes in wood members shall not be drilled more than 1/8" larger than the bolt diameter.
- Balloon frame all walls with sloping ceilings or with raised ceilings. Maximum stud height for 2x4 stud is 10'-0" and for 2x6 stud 14'-0". Provide fire blocking such that maximum concealed space is 10'-0".
- Block under all perpendicular partitions. Double joists (min.) under all parallel partitions.
- Bolt multiple joists together with 1/2" machine bolts at 24" o.c. Alternate bolts between the upper 1/4 and lower 1/4 of the joist depth. Nail double joists with 16d nails at 12" o.c. (similar pattern). Nail double or multiple studs with 16d at 12" o.c. (similar pattern).
- Provide lateral support at ends of joist and rafters by blocking, rim joists or hangers. Block between joists and rafters over all supports.
- Microlam (LVL) floor joist or beam shall have grade 1.9 DF/LP/WH 6 Fb=2600 psi, Fv=285 psi, MOE=2.0x10 psi, ICC ESR-1387
- Parallam (PSL) beam shall have grade 2.0 DF/SP/WH/YP OR YP/RM 6 Fb=2900 psi, Fv=290 psi, MOE=2.2x10 psi, ICC ESR-1387
- Anthony Power beam (APB) beam shall have grade 3.0 6 Fb=3000 psi, Fv=300 psi, MOE=2.1x10 psi, ICC ESR-1104
- All wood members in contact with concrete or masonry foundation surface shall be pressure treated with a preservative.
- Solid sawn members in floors shall be placed with crowns and any major knots upward.
- Posts shall be continuous from beam or header to floor or sill below. Provide at least a double stud at all bearing points under beams.
- All headers 4x12 U.O.N.
- Lap top plates 48". Nail with 16d nails.
- Maximum allowable notch is 7/8" in 2x4 studs and 1-3/8" in 2x6 studs. Maximum allowable bored hole is 1-3/8" in 2x4 studs and 2-1/8" in 2x6 studs with at lease 5/8" clear to the edge of the stud.
- Use 1x6 collar ties at 48" o.c. wherever possible. Collar ties shall be placed as low as feasible.
- Provide A35 anchor from rafter to top plate at 48" o.c. U.O.N.
- All wood members in contact with concrete or masonry foundation surface shall be pressure treated with a preservative.
- Solid sawn members in floors shall be placed with crowns and any major knots upward.
- Posts shall be continuous from beam or header to floor or sill below. Provide at least a double stud at all bearing points under beams.
- All headers 4x12 U.O.N.
- Lap top plates 48". Nail with 16d nails.
- Maximum allowable notch is 7/8" in 2x4 studs and 1-3/8" in 2x6 studs. Maximum allowable bored hole is 1-3/8" in 2x4 studs and 2-1/8" in 2x6 studs with at lease 5/8" clear to the edge of the stud.
- Use 1x6 collar ties at 48" o.c. wherever possible. Collar ties shall be placed as low as feasible.
- Provide A35 anchor from rafter to top plate at 48" o.c. U.O.N.
- Unless otherwise noted, stagger all plywood joints in floor and roof sheathing and lay face grain perpendicular to supports. Minimum nailing for roof sheathing shall be 8d common at 6" along support edges and 12" field. Nail perimeter of diaphragm with 8d common at 4" o.c. Minimum nailing for floor sheathing shall be 10d common at 6" o.c. along supported edges and 10" field. Nail perimeter of diaphragm with 10d common at 4" o.c.

FRAMING (CONTINUED)

- Vertical plywood sheathing shall be blocked at all edges and shall be extended from top plate to sill of wall. Where possible, butt vertical sheathing on floor joists or blocking, leaving 3/8" gap for shrinkage. Vertical sheathing shall continue to the foundation sill if required on first floor walls. Minimum nailing is 8d at 6" edges and 12" field.
- Where plywood shear walls are interrupted by floor, provide adequate shear transfer from sole plate to blocking or joist below and from the blocking to the top plate of a wall continuation below, if any, by providing 16d common nails at the same spacing as the shear wall edge nailing U.O.N. Add 2x nailers or metal anchors as necessary.
- Minimum gypsum board nailing is 5d Parkerhead nail (6d for 5/8" board) at 7" o.c. edges and field.
- Holdowns are attached to 4x studs at the ends of shear walls and extend to either 4x studs or framing below or to the foundation bolts (see detail for size). Nail all double studs at holdowns together with 16d nails at 8" o.c. Where cripple walls occurs below the lower floor, install an MST172 strap holdown from the shear wall to a 4x cripple stud and a foundation holdown from the 4x cripple stud to the foundation, or bolt directly to the foundation bolt using threaded rod. The contractor shall carefully review holdown bolt embedment requirements in the Simpson Strong-Tie catalog.
- Where solid sawn wood members are framed into glu-lam members in floors, the tops of these members shall be held 3/8" above glu-lams.
- Cantilever deck joists shall be notched with hand tools to avoid overcutting.
- Fasteners for pressure-preservative treated and fire-retardant treated wood shall be of hot-dipped zinc coated galvanized, stainless steel, silicon bronze or copper. CBC 2304.9.5

STRUCTURAL STEEL

- Detailing, fabrication, and erection of structural steel shall conform to the specification and standards of the latest edition of the AISC Manual of Steel Construction.
- All structural steel plates, shapes and bars shall conform to ASTM A36.
- Steel shall be free of all scale, rust or other contaminants that would impair the bonding of the concrete to the steel.
- All structural HSS tube steel shall be A500 Grade "B". Steel bolts shall be A307.
- All steel members shall have a minimum of 2 coats of red primer, finish coat if required by owner.
- Special inspection required for all field & shop welds.

SOILS

Slope finish exterior surface away from foundation.

ABBREVIATIONS

A & B	ABOVE AND BELOW	M.B.	MACHINE BOLT
A.B.	ANCHOR BOLTS	MEZZ.	MEZZANINE
ABV	ABOVE	MFG.	MANUFACTURING
ADJ	ADJACENT	M.I.	MALLEABLE IRON
A.F.F.	ABOVE FINISH FLOOR	MIN	MINIMUM
A.P.A.	AMERICAN PLYWOOD ASSO.	MTD.	MOUNTED
ARCH	ARCHITECTURAL	(N)	NEW
B.F.W.	BALLOON FRAMED WALL	N	NORTH
BLDG.	BUILDING	N/A	NOT APPLICABLE
BLK'G	BLOCKING	NAIL'G	NAILING
BM.	BEAM	N.E.	NORTHEAST
BN.	BOUNDARY NAILING	N.T.S.	NOT TO SCALE
BOTT	BOTTOM	N.W.	NORTHWEST
BRG	BEARING	O.C.	ON CENTER
C	CAMBER	O.H.	OPPOSITE HAND
CANT.	CANTILEVER	OPEN'G	OPENING
C.J.	CEILING JOIST	OPT.	OPTIONAL
CLG	CEILING	O.S.B.	OREGON STRAND BOARD
CTR	CENTER	PC'S	PIECES
CLR	CLEARANCE	P.E.N.	PLYWOOD EDGE NAILING
CONC	CONCRETE	PERIM.	PERIMETER
C.M.U.	CONC. MASONARY UNIT	PLT.	PLATE
CONN	CONNECT, CONNECTION	PLC'S	PLACES
CONST	CONSTRUCTION	PLY'D	PLYWOOD
CONT	CONTINUOUS	P.T	PRESSURE TREATED
CS'K	COUNTERSINK	RAF.	RAFTERS
C.T.	COLLAR TIE	RDWD.	REDWOOD
DBL.	DOUBLE	REQ'D	REQUIRED
DET	DETAIL	REQ'T	REQUIREMENT
D.F.	DOUGLAS FIR	RET.	RETAINING
DIA	DIAGONAL	RF.	ROOF
DIAPH	DIAPHRAGM	S	SOUTH
DIM	DIMENSION	S.A.D.	SEE ARCH. DRW'GS
DIR	DIRECTION	S.G.E.	STRUCTURAL GABLE END
D.R.	DOOR	S.B.	STRONG BACK
D.F.	DOOR FRAME	SCH.	SCHEDULE
DWG	DRAWING	S.E.	SOUTHEAST
E	EAST	SEC.	SECTION
EA	EACH	SIM.	SIMILAR
E.F.	EACH FACE	SHT.	SHEET
ELEV	ELEVATION	SHT'G	SHEATHING
EMB	EMBEDMENT	SIMP.	SIMPSON COMPANY
E.N.	EDGE NAILING	SPC'G	SPACING
EQ.	EQUAL	SPECS	SPECIFICATIONS
E.W.	EACH WAY	SQ.	SQUARE
E.W.E.F.	EACH WAY EACH FACE	S.S.D.	SEE STR. DRW'GS
EXP	EXPANSION	STL	STEEL
EX.	EXISTING	STR.	STRUCTURAL
F.F.	FINISH FLOOR	S.W.	SOUTHWEST
F.H.	FULL HEIGHT	S.W.S.	SHEAR WALL SCHEDULE
F.H.O.B.	FULL HEIGHT OF BLDG.	S.W.T.	SHEAR WALL TYPE
F.W.O.B.	FULL WIDTH OF BLDG.	T&B	TOP AND BOTTOM
FIN	FINISH	T&G	TONGUE AND GROOVE
FLR	FLOOR	T.B.F.V.	TO BE FIELD VERIFIED
F.J.	FLOOR JOIST	T.D.	TIEDOWN OR HOLDOWN
F.L.O.M.	FULL LENGTH OF MEMBER	T.D.S.	TIEDOWN SCHEDULE
F.N.	FACE NAILED	T.N.	TOE NAIL
F.O.S.	FACE OF STUDS	T.O.	TOP OF
F.O.C.	FACE OF CONCRETE	T.O.C.	TOP OF CONCRETE
FNDN.	FOUNDATION	T.O.S.F.	TOP OF SUB-FLOOR
F.P.	FIREPLACE	T.O.W	TOP OF WALL
FRAM'G	FRAMING	TOT	TOTAL
FT.	FEET	TYP.	TYPICAL
FTG.	FOOTING	U.N.O.	UNLESS NOTED OTHERWISE
GALV.	GALVANIZED	U.O.N.	UNLESS OTHERWISE NOTED
GAR.	GARAGE	V.I.F.	VERIFY IN FIELD
GEN.	GENERAL	W	WEST
G.L.B.	GLU-LAM BEAM	WDW	WINDOW
GR.	GRADE	S.W.F.	STEEL WIDE FLANGE
HDR.	HEADER	W.W.F.	WELDED WIRE FABRIC
HT.	HEIGHT	W/	WITH
INFO.	INFORMATION	W/O	WITHOUT
INT.	INTERIOR	@	AT
J.H.	JOIST HANGER	'	FEET
JNT	JOINT	"	INCHES
JST	JOIST	II	PARALLEL
K.P.	KING POST	⊥	PERPENDICULAR
LOC.	LOCATION	&	AND
MANU.	MANUFACTURER	Φ	DIAMETER
MAT'L	MATERIAL	CL	CENTER LINE
MAX.	MAXIMUM	U	HANGER
		L	STEEL ANGLE

PROJECT SEISMIC DESIGN DATA

A. SEISMIC IMPORTANCE FACTOR, I = 1.0 AND RISK CATEGORY = II
B. MAPPED SPECTRAL RESPONSE ACCELERATIONS, Ss = 1.878gAND S_1 = 0.771g
C. SITE CLASS = D-DEFAULT
D. SPECTRAL RESPONSE COEFFICIENTS, S_{DS} = 1.503gAND S_{D1} = 0.8738g
E: SEISMIC DESIGN CATEGORY = E
F. BASIC SEISMIC-FORCE-RESISTING SYSTEM(S) = WOOD PANEL SHEAR WALL
G. SEISMIC RESPONSE COEFFICIENTS(S) Cs = 0.231
H. RESPONSE MODIFICATION FACTOR(S) R = 6.5
I. ANALYSIS PROCEDURE USED = EQUIVALENT LATERAL FORCE PROCEDURE

PROJECT WIND DESIGN DATA

A. BASIC WIND SPEED (3-SECOND GUST) MILES PER HOUR = 100
B. WIND IMPORTANCE FACTOR, I =1.0 AND OCCUPANCY CATEGORY = II
C. WIND EXPOSURE = C
D. INTERNAL PRESSURE COEFFICIENT, GC_{pi} = 0.18
E. DESIGN WIND PRESSURE = 09.53 PSF 00 TO 15 FEET
10.13 PSF 15 TO 20 FEET
10.61 PSF 20 TO 25 FEET

CBC TABLE 2304.10.1 FASTENING SCHEDULE

	DESCRIPTION OF BUILDING ELEMENTS	NUMBER AND TYPE OF FASTENER	SPACING AND LOCATION
	WALL		
24.	2" subfloor to joist or girder	2-16d common (3½" x 0.162")	Face nail
25.	2" plank (plank & beam - floor & roof)	2-16d common (3½" x 0.162")	Each bearing, face nail
26.	Built up girders and beams, 2" lumber layers	20 common (4" x 0.192")	32" o.c. face nail at top and bottom staggered on opposite sides
		10d box (3" x 0.128"); or 3" x 0.131" nails; or 3" 14 gage staples, 7/16" crown	24" o.c. face nail at top and bottom staggered on opposite sides
		And: 2-20d common (4" x 0.192"); or 3-10d box (3" x 0.128"); or 3-3" x 0.131" nails; or 3-3" 14 gage staples, 7/16" crown	Ends and at each splice, face nail
27.	Ledger strip supporting joists or rafters	3-16d common (3½" x 0.162"); or 4-10d box (3" x 0.128"); or 4-3" x 0.131" nails; or 4-3" 14 gage staples, 7/16" crown	Each joist or rafter, face nail
28.	Joist to band joist or rim joist	3-16d common (3½" x 0.162"); or 4-10d box (3" x 0.128"); or 4-3" x 0.131" nails; or 4-3" 14 gage staples, 7/16" crown	End nail
29.	Bridging or blocking to joist, rafter or truss	2-8d common (2½" x 0.131"); or 2-10d box (3" x 0.128"); or 2-3" x 0.131" nails; or 2-3" 14 gage staples, 7/16" crown	Each end, toenail

WOOD STRUCTURAL PANELS, SUBFLOOR, ROOF AND INTERIOR WALL SHEATHING TO FRAMING AND PARTICLEBOARD WALL SHEATHING TO FRAMING [a]

			Edges (Inches)	Intermediate Supports (Inches)
30.	⅜"-½"	6d common or deformed (2" x 0.113") (subfloor and wall)	6"	12"
		8d common or deformed (2½" x 0.131") (roof) OR RSRS-01 (2⅜" x 0.113") nail (roof)[d]	6"	12"
		2 ⅜" x 0.113" nail (subfloor and wall)	6"	12"
		1 ¾" 16 gage staple, 7/16" crown (subfloor and wall)	4"	8"
		2 ⅜" x 0.113" nail (roof)	4"	8"
		1 ¾" 16 gage staple, 7/16" crown (roof)	3"	6"
31.	19/32" – ¾"	8d common (2 ½" x 0.113"); or 6d deformed (2" x 0.113") (subfloor and wall)	6"	12"
		8d common or deformed (2½" x 0.131") (roof) OR RSRS-01 (2⅜" x 0.113") nail (roof)[d]	6"	12"
		2 ⅜" x 0.113" nail; or 2" 16 gage staple, 7/16" crown	4"	8"
32.	⅞" – 1 ¼"	10d common (3" x 0.148"); or 8d deformed (2 ½" x 0.131")	6"	12"
	OTHER EXTERIOR WALL SHEATHING			
33.	½" fiberboard sheathing [b]	1 ½" galvanized roof nail (7/16" head diameter); or 1 ¼" 16 gage staple with 7/16" or 1" crown	3"	6"
34.	25/32" fiberboard sheathing [b]	1 ¾" galvanized roof nail (7/16" diameter head); or 1 ½" 16 gage staple with 7/16" or 1" crown	3"	6"
	WOOD STRUCTURAL PANELS, COMBINATION SUBFLOOR UNDERLAYMENT TO FRAMING			
35.	¾" and less	8d common (2 ½" x 0.131"); or 6d deformed (2" x 0.113")	6"	12"
36.	⅞"-1"	8d common (2 ½" x 0.131"); or 8d deformed (2 ½" x 0.131")	6"	12"
37.	1 ⅛"-1 ¼"	10d common (3" x 0.148"); or 8d deformed (2 ½" x 0.131")	6"	12"
	PANEL SIDING TO FRAMING			
38.	½" or less	6d corrosion-resistant siding (1 ⅞" x 0.106"); or 6d corrosion-resistant casing (2 " x 0.099")	6"	12"
39.	⅝"	8d corrosion-resistant siding (2 ⅜" x 0.128"); or 8d corrosion-resistant casing (2 ½" x 0.113")	6"	12"
	INTERIOR PANELING			
40.	¼"	4d casing (1 ½" x 0.080"); or 4d finish (1 ½ " x 0.072")	6"	12"
41.	⅜"	6d casing (2" x 0.099"); or 6d finish (Panel supports at 24 inches)	6"	12"

For SI: 1 inch = 25.4 mm.
a. Nails spaced at 6 inches at intermediate supports where spans are 48" or more. For nailing of wood structural panel and particleboard diaphragms and shear walls, refer to Section 2305. Nails for wall sheathing are permitted to be common, box or casing.
b. Spacing shall be 6 inches on center on the edges and 12 inches on center at intermediate supports for nonstructural applications. Panel supports at 16 inches (20 inches if strength axis in the long direction of the panel, unless otherwise marked).
c. Where a rafter is fastened to an adjacent parallel ceiling joist in accordance with this schedule and the ceiling joist is fastened to the top plate in accordance with this schedule, the number of toenails in the rafters shall be permitted to be reduced by one nail.
d. RSRS-01 is a Roof Sheathing Rink Shank nail meeting the specifications in ASTM F1667.

PROJECT FLOOR AND ROOF LIVE LOADS

A. FLOOR LIVE LOAD = 40 PSF
B. ROOF LIVE LOAD = 20 PSF

PROJECT GEOTECHNICAL DESIGN DATA

A. GEOTECHNICAL REPORT : NOT APPLICABLE (USE C.B.C. MIN. REQUIREMENTS)
B. SOIL BEARING PRESSURE : 1500 PSF (DEAD LOAD + LIVE LOAD)

PROJECT RAIN PRECIPITAITON DATA

A. 15-MINUTE INTENSITY = 2.65 IN/HR
B. 60-MINUTE INTENSITY = 1.29 IN/HR

SPECIAL INSPECTION REQUIRED FOR

1. Simpson Strong Wall Installation by EOR.

CBC TABLE 2304.10.1 FASTENING SCHEDULE

	DESCRIPTION OF BUILDING ELEMENTS	NUMBER AND TYPE OF FASTENER	SPACING AND LOCATION
	ROOF		
1.	Blocking between ceiling joists, rafters or trusses to top plate or other framing below	3 - 8d common (2 ½" × 0.131"); or 3-10d box (3" x 0.128"); or 3 - 3" × 0.131" nails; or 3 - 3" 14 gage staples, 7/16" crown	Each end, toenail
	Blocking between rafters or truss not at the wall top plate, to rafter or truss	2 - 8d common (2 ½" × 0.131") 2 - 3" × 0.131" nails 2 - 3" 14 gage staples	Each end, toenail
		2-16d common (3½" x 0.162") 3-3" x 0.131" nails 3-3" 14 gage staples	End nail
	Flat blocking to truss and web filler	16d common (3½" x 0.162") @ 6" o.c. 3" x 0.131" nails @ 6" o.c. 3" x 14 gage staples @ 6" o.c.	Face nail
2.	Ceiling joists to top plate	3-8d common (2 ½" x 0.131"); or 3-10d box (3" x 0.128"); or 3-3" x 0.131" nails; or 3-3" 14 gage staples, 7/16" crown	Each joist, toenail
3.	Ceiling joist not attached to parallel rafter, laps over partitions (no thrust) (See Section 2308.7.3.1, Table 2308.7.3.1)	3-16d common (3 ½" x 0.162"); or 4-10d box (3" x 0.128"); or 4-3" x 0.131" nails; or 4-3" 14 gage staples, 7/16" crown	Face nail
4.	Ceiling joists attached to parallel rafter (heel joint) (Section 2308.7.3.1 and Table 2308.7.3.1)	Per Table 2308.7.3.1	Face nail
5.	Collar tie to rafter	3-10d common (3" x 0.148"); or 4-10d box (3" x 0.128"); or 4-3" x 0.131" nails; or 4-3" 14 gage staples, 7/16" crown	Face nail
6.	Rafter or roof truss to top plate (See section 2308.7.5 and Table 2308.7.5)	3-10d common (3" x 0.148"); or 3-16d box (3½" x 0.135");or 4-10d box (3" x 0.128"); or 4-3" x 0.131" nails; or 4-3" 14 gage staples, 7/16" crown	Toenail (c)
7.	Roof rafters to ridge valley or hip rafters; or roof rafter to 2" ridge beam	2-16d common (3 ½" x 0.162"); or 3-10d box (3" x 0.128"); or 3-3" x 0.131" nails; or 3-3" 14 gage staples, 7/16" crown; or	End nail
		3-10d common (3" x 0.148"); or 4-16d box (3 ½" x 0.135"); or 4-10d box (3" x 0.128"); or 4-3" x 0.131" nails; or 4-3" 14 gage staples, 7/16" crown	Toenail
	WALL		
8.	Stud to Stud (not at braced wall panels)	16d common (3½" x 0.162");	24" o.c. face nail
		10d box (3" x 0.128"); or 3" x 0.131" nails; or 3-3" 14 gage staples, 7/16" crown	16" o.c. face nail
9.	Stud to stud and abutting studs at intersecting wall corners (at braced wall panels)	16d common (3½" x 0.162");	16" o.c. face nail
		16d box (3½" x 0.135");	12" o.c. face nail
		3" x 0.131" nails; or 3-3" 14 gage staples, 7/16" crown	12" o.c. face nail
10.	Built-up header (2" to 2" header)	16d common (3½" x 0.162");	16" o.c. face nail
		16d box (3½" x 0.135");	12" o.c. face nail
11.	Continuous header to stud	4-8d common (2½" x 0.131); or 4-10d box (3" x 0.128")	Toenail
12.	Top plate to top plate	16d common (3½" x 0.162"); or	16" o.c. face nail
		10d box (3" x 0.128"); or 3" x 0.131" nails; or 3" 14 gage staples, 7/16" crown	12" o.c. face nail
13.	Top plate to top plate, at end joints	8-16d common (3½" x 0.162"); or 12-10d box (3" x 0.128"); or 12-3" x 0.131" nails; or 12-3" 14 gage staples, 7/16" crown	Each side of end joint, face nail (min 24" lap splice length each side of end joint)
14.	Bottom plate to joist, rim joist, band joist or blocking (not at braced wall panels)	16d common (3½" x 0.162"); or	16" o.c. face nail
		16d box (3" x 0.135"); or 3" x 0.131" nails; or 3" 14 gage staples, 7/16" crown	12" o.c. face nail
15.	Bottom plate to joist, rim joist, band joist or blocking at braced wall panels	2-16d common (3 ½" x 0.162"); or 3-16d box (3" x 0.135"); or 4-3" x 0.131" nails; or 4-3" 14 gage staples, 7/16" crown	16" o.c. face nail
16.	Stud to top or bottom plate	4-8d common (2½" x 0.131"); or 4-10d box (3" x 0.128"); or 4-3" x 0.131" nails; or 4-3" 14 gage staples, 7/16" crown; or	Toenail
		2-16d common (3½" x 0.162"); or 3-10d box (3" x 0.128"); or 3-3" x 0.131" nails; or 3-3" 14 gage staples, 7/16" crown	End nail
17.	Top plates, laps at corners and intersections	2-16d common (3½" x 0.162"); or 3-10d box (3" x 0.128"); or 3-3" x 0.131" nails; or 3-3" 14 gage staples, 7/16" crown	Face nail
18.	1" brace to each stud and plate	2-8d common (2½" x 0.131"); or 2-10d box (3" x 0.128"); or 2-3" x 0.131" nails; or 2-3" 14 gage staples, 7/16" crown	Face nail
19.	1" x 6" sheathing to each bearing	2-8d common (2½" x 0.131"); or 2-10d box (3" x 0.128")	Face nail
20.	1" x 8" and wider sheathing to each bearing	3-8d common (2½" x 0.131"); or 3-10d box (3" x 0.128")	Face nail
	FLOOR		
21.	Joist to sill, top plate, or girder	3-8d common (2½" x 0.131"); or floor 3-10d box (3" x 0.128"); or 3-3" x 0.131" nails; or 3-3" 14 gage staples, 7/16" crown	Toenail
22.	Rim joist, band joist, or blocking to top plate, sill or other framing below	8d common (2½" x 0.131"); or 10d box (3" x 0.128"); or 3" x 0.131" nails; or 3" 14 gage staples, 7/16" crown	6" o.c., toenail
23.	1" x 6" subfloor or less to each joist	2-8d common (2½" x 0.131"); or 2-10d box (3" x 0.128");	Face nail

REGISTERED PROFESSIONAL ENGINEER
FRANCISCO M. DUARTE
No. 69094
Exp.06-30-26
CIVIL
STATE OF CALIFORNIA

FMD ENGINEERING, INC.
CIVIL ENGINEERS
32108 ALVARADO BLVD, # 340
UNION CITY, CA. 94587
OFFICE (510) 475-8290
e-mail : fduarte@fmdengr.com

AKD HOMES
763 LAKEVIEW AVENUE
SAN FRANCISCO, CA 94112

REVISIONS/DATE	BY
△1 ARCH. REV./PC 05/24/2023	FD-01

APPROVED
Dept. of Building Insp.
-San Francisco-
08/06/2024

Engineer: FD
Drafter: FD-01
Date: 05/06/2022
Scale: AS NOTED
Job No: 22049

SHEET
STD1

DRAWING NAME: C:\FMD\O DRIVE\PROJECTS\2022\22049- AKD HOMES (CAD-FD)\STRUCTURAL\23-07-02- 22049 1-STRUCT (1AC)\22049-STD1.dwg
PLOT DATE: 07-02-24 PLOTTED BY: Francisco

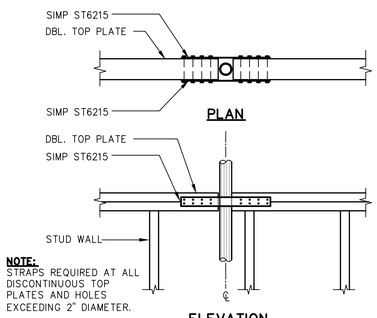

10 — TYPICAL TOP PLATE STRAPS

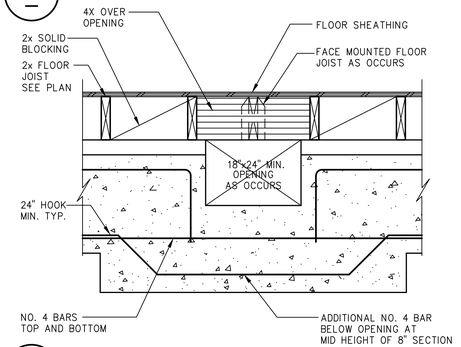

11 — TYPICAL CRAWL SPACE ACCESS OPENING

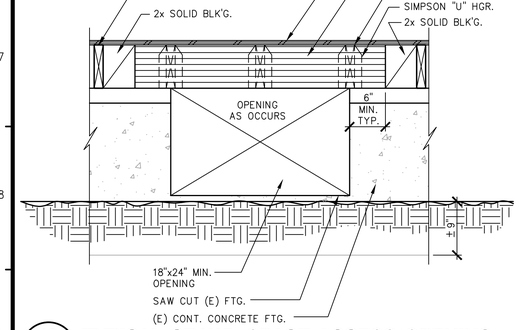

12 — TYPICAL CRAWL SPACE ACCESS OPENING

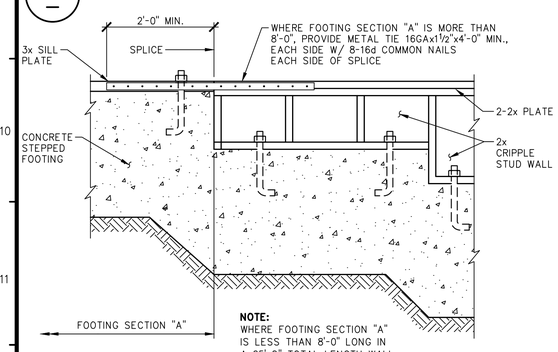

13 — STEPPED FOOTING CONNECTION

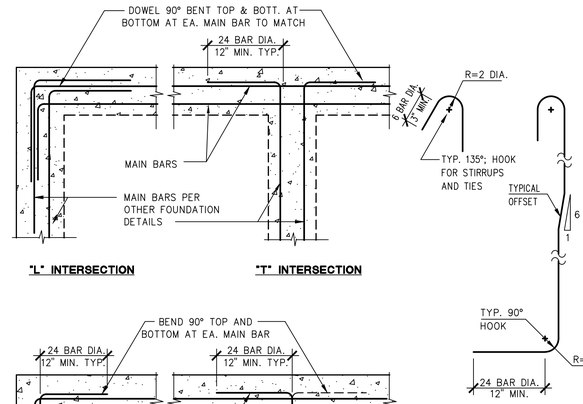

HORIZONTAL SPLICE SCHED.		
BAR SIZE	BAR DIA.	48 DIA.
#3	0.375"	1'-6"
#4	0.5"	2'-0"
#5	0.625"	2'-6"
#6	0.75"	3'-0"
#7	0.875"	3'-6"

7 — TYP. HORIZONTAL CONCRETE REINFORCEMENT

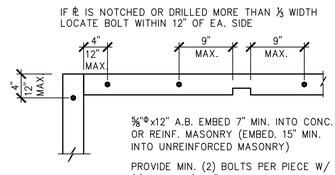

⅝"Ø x12" A.B. EMBED 7" MIN. INTO CONC. OR REINF. MASONRY (EMBED. 15" MIN. INTO UNREINFORCED MASONRY)

PROVIDE MIN. (2) BOLTS PER PIECE W/ (1) BOLT W/IN 9" OF EA. END.

SPACE A.B.'s AT 48" O.C. FOR ONE STORY AND 48" O.C. AT TWO STORY BUILDING AREAS.

A NUT AND 3"x3"x¼" STL. PLATE WASHER ON EA. BOLT STL PLATE WASHER SHALL EXTEND TO WITHIN ½" OF THE EDGE OF THE SILL PLATE ON THE SIDE(S) WITH SHEATHING. SLOTTED HOLE WASHERS ARE ACCEPTABLE PER SECTION 4.3.6.4.3 OF THE SDPWS

MUDSILL SHALL BE 3x P.T.D.F. No. 1 (U.O.N.)

8 — SILL PLATE DETAIL

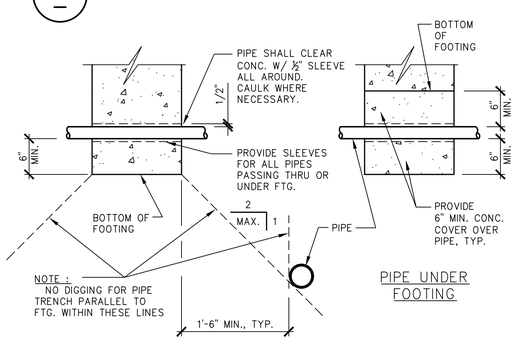

9 — PIPE THRU FTG. AND PARALLEL TO FTG.

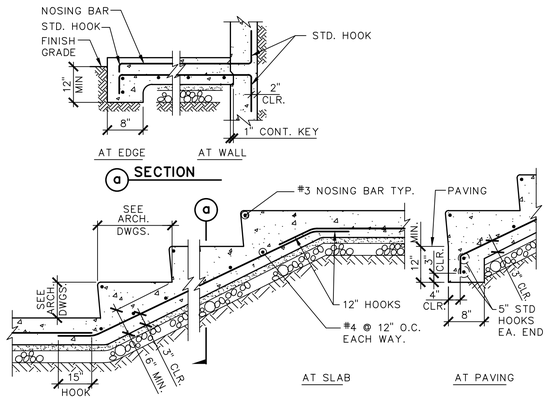

4 — SLAB ON GRADE

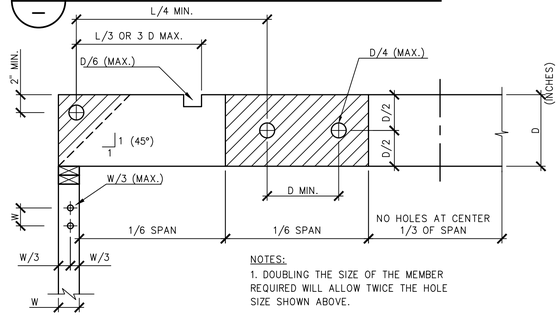

NOTES:

1. DOUBLING THE SIZE OF THE MEMBER REQUIRED WILL ALLOW TWICE THE HOLE SIZE SHOWN ABOVE.
2. STUDS MAY NOT BE NOTCHED IN ANY CASE.

5 — HOLES & NOTCHES AT JOIST & STUD

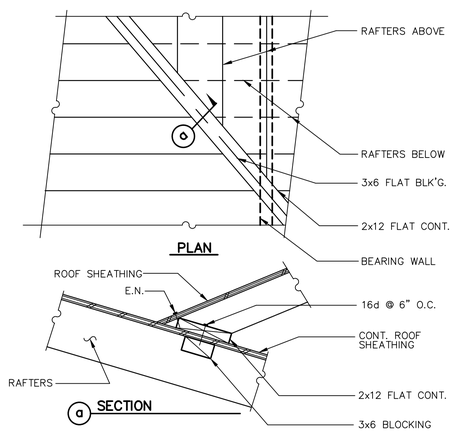

6 — TYPICAL CALIFORNIA FRAMING

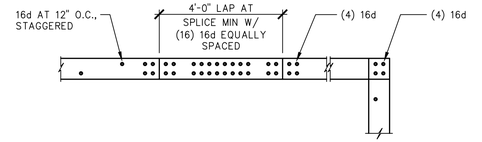

1 — TYPICAL TOP PLATE SPLICE

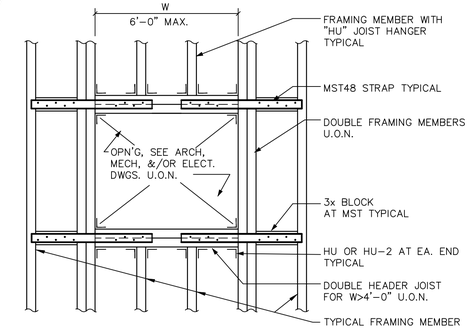

2 — OPENING IN FRAME AROUND HORIZ. DIAPHRAGM SEE PLAN FOR LOCATION

1.55E TIMBERSTRAND® LSL HEADERS AND BEAMS

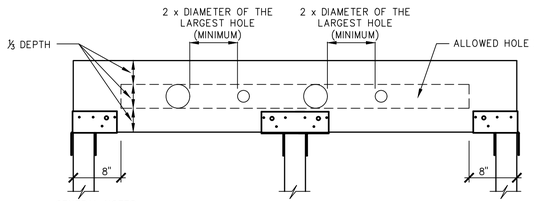

HEADER DEPTH	MAXIMUM ROUND HOLE SIZE
9¼"-9½"	3"
11¼"-11⅞"	3⅜"
14" TO 16"	4⅝"

GENERAL NOTES:

No rectangular holes
No holes in headers or beams in plank orientation

SEE ILLUSTRATION FOR ALLOWED HOLE ZONE

PSL AND LVL BEAMS

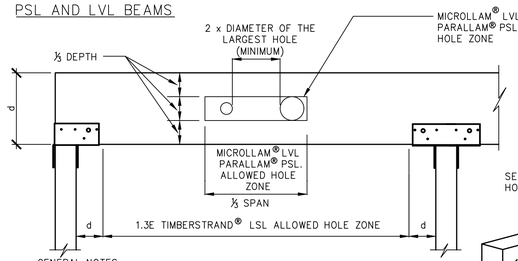

BEAM DEPTH	MAXIMUM ROUND HOLE SIZE
4⅜"	1"
5½"	1¾"
7¼" TO 20"	2"

SEE ILLUSTRATION FOR ALLOWED HOLE ZONE

GENERAL NOTES:

Allowed hole zone suitable for uniformly loaded headers and beams only.
No rectangular holes
No holes in cantilevers.
No holes in headers or beams in plank orientation

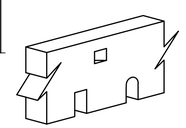

DO NOT cut, notch, or drill holes in headers except as indicated in the illustrations and tables above.

3 — ALLOWABLE HOLES

FMD ENGINEERING, INC.
CIVIL ENGINEERS
32108 ALVARADO BLVD. # 340
UNION CITY, CA. 94587
OFFICE (510) 475-8290
e-mail : fdunn@fmdengr.com

REGISTERED PROFESSIONAL ENGINEER — FRANCISCO M. DUARTE — No. 69094 — Exp.06-30-26 — CIVIL — STATE OF CALIFORNIA

AKD HOMES
763 LAKEVIEW AVENUE
SAN FRANCISCO, CA 94112

REVISIONS/DATE	BY
1 ARCH. REV./PC 05/24/2023	FD-01

APPROVED
Dept. of Building Insp.
-San Francisco-
08/06/2024

Engineer:	FD
Drafter:	FD-01
Date:	05/06/2022
Scale:	AS NOTED
Job No:	22049

SHEET
STD2

DRAWING NAME: G:\FMD\0 DRIVE\PROJECTS\2022\22049- AKD HOMES (CAD-FD)\STRUCTURAL\23-07-02- 22049 1-STRUCT (1AC)\22049-ST02.dwg
PLOT DATE: 07-02-24 PLOTTED BY: Francisco

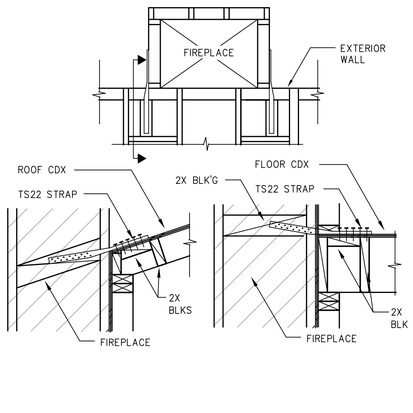

10 — TYPICAL METALTIE FOR WOOD FRAME CHIMNEY

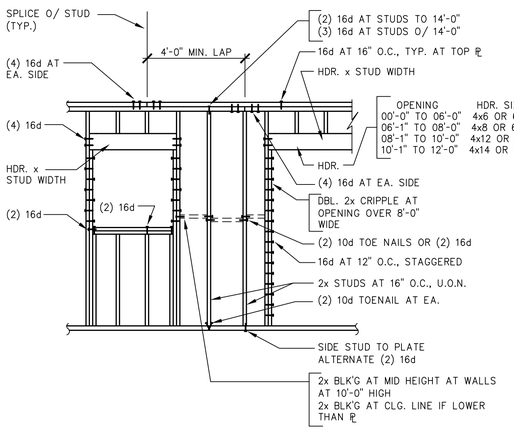

7 — TYPICAL STUD WALL DETAIL

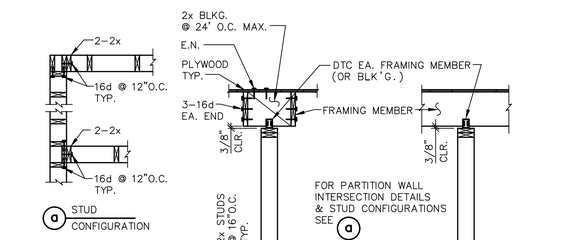

NOTES:
1. 2x SILL PLATE AT PARTITION MAY BE FASTENED TO CONC. SLAB WITH 1/4" POWDER-ACTUATED FASTENERS @ 2'-8"O.C., PENETRATING 1 1/2" INTO CONCRETE AND SHALL BE INSTALLED PER ICC REPORT. WASHERS SHALL BE 1 1/2" x14 GA. POWDER-ACTUATED FASTENERS SHALL NOT BE PERMITTED THRU 3x SILLS AT BEARING AND SHEAR WALLS, NOR IN CONC. CURBS.
2. SEE PLAN FOR HEADER SCHEDULE

4 — NON-STRUCTURAL PARTITION

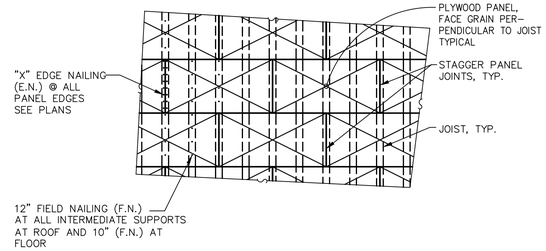

NOTES
1. USE 10d COMMON NAILS AT FLOORS; 8d COMMON NAILS AT ROOFS.
2. GLUE PLYWOOD TO FLOOR FRAMING MEMBERS PRIOR TO NAILING.
3. MINIMUM PLYWOOD WIDTH IS 24".
4. SEE GENERAL NOTES FOR PLYWOOD THICKNESS & GRADE.
5. PROVIDE SIMPSON "PSCL" CLIPS AT ALL UNSUPPORTED EDGES.

1 — PLYWOOD SHEATHING AT ROOF AND FLOORS UNBLOCKED

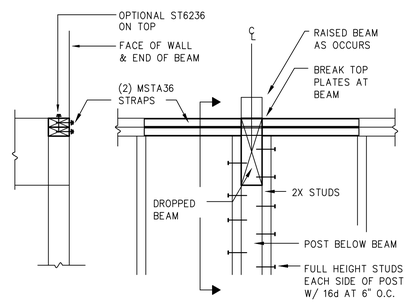

11 — TYPICAL TOP PLATE SPLICE AT BEAM CONNECTION

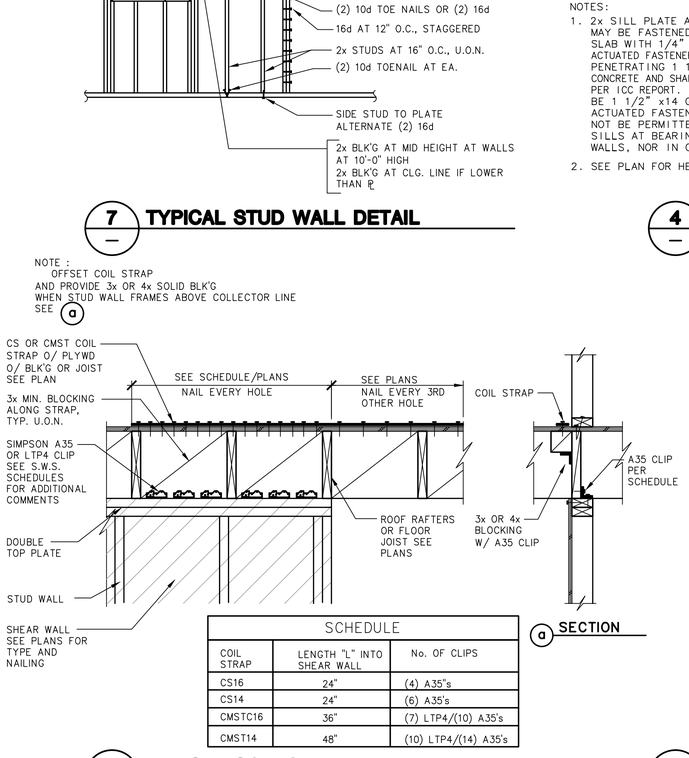

SCHEDULE		
COIL STRAP	LENGTH "L" INTO SHEAR WALL	No. OF CLIPS
CS16	24"	(4) A35"s
CS14	24"	(6) A35's
CMSTC16	36"	(7) LTP4/(10) A35's
CMST14	48"	(10) LTP4/(14) A35's

8 — TYPICAL COIL STRAP DRAG CONNECTION AT ROOF

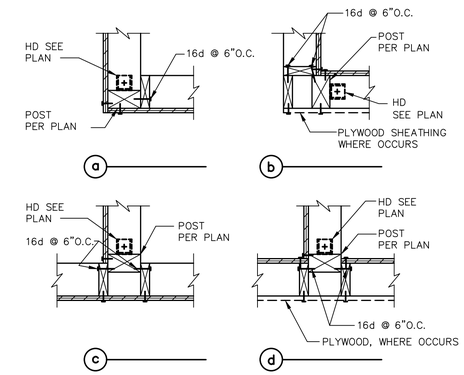

NOTE: ALL NAILING SHOWN TO BE PLYWOOD SHEAR WALL E.N., U.O.N.

5 — SHEAR WALL INTERSECTIONS

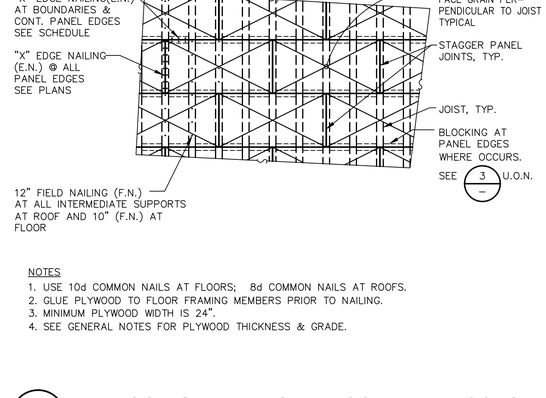

NOTES
1. USE 10d COMMON NAILS AT FLOORS; 8d COMMON NAILS AT ROOFS.
2. GLUE PLYWOOD TO FLOOR FRAMING MEMBERS PRIOR TO NAILING.
3. MINIMUM PLYWOOD WIDTH IS 24".
4. SEE GENERAL NOTES FOR PLYWOOD THICKNESS & GRADE.

2 — PLYWOOD SHEATHING AT ROOF AND FLOORS REQUIRING SPECIAL BLOCKING AND EDGE NAIL SEE PLAN FOR LOCATION

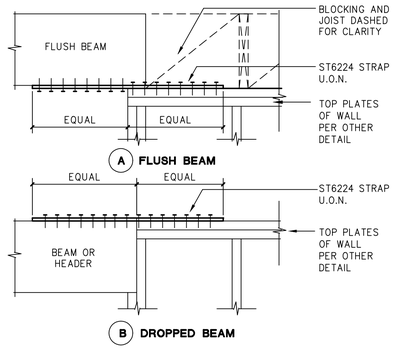

12 — TYPICAL SHEAR COLLECTOR STRAP

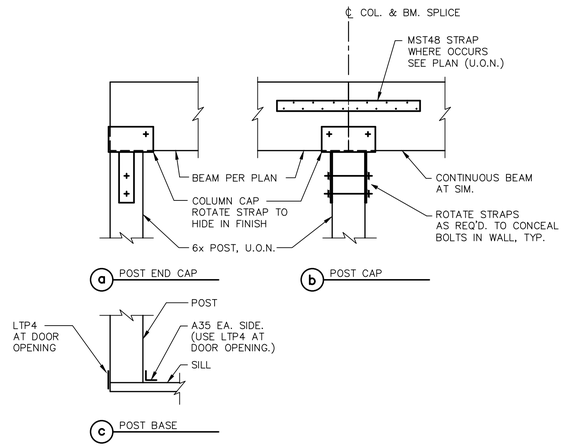

9 — BEAM AND POST CONNECTION

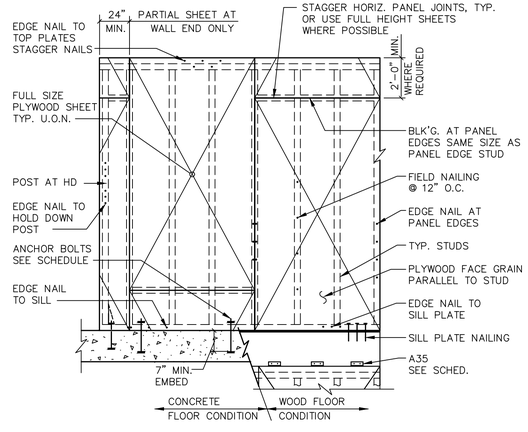

6 — SHEAR WALL FRAMING ELEVATION

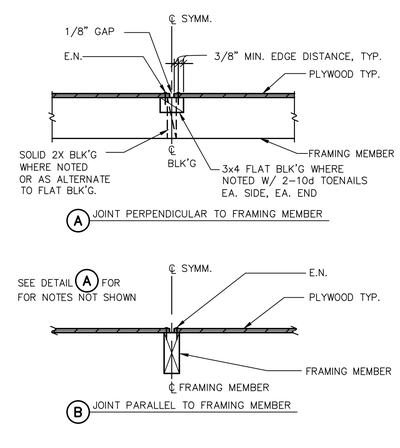

3 — PLYWOOD NAILING

FMD ENGINEERING, INC.
CIVIL ENGINEERS
32108 ALVARADO BLVD. # 340
UNION CITY, CA. 94587
OFFICE (510) 475-8290
e-mail : fdunet@mindspring.com

FRANCISCO M. DUARTE
No. 69094
Exp. 06-30-26
CIVIL
STATE OF CALIFORNIA

AKD HOMES
763 LAKEVIEW AVENUE
SAN FRANCISCO, CA 94112

REVISIONS/DATE	BY
1 ARCH. REV./PC 05/24/2023	FD-01

APPROVED
Dept. of Building Insp.
-San Francisco-
08/06/2024

Engineer: FD
Drafter: FD-01
Date: 05/06/2022
Scale: AS NOTED
Job No: 22049

SHEET
STD3

DRAWING NAME: C:\FMD\O DRIVE\PROJECTS\2022\22049- AKD HOMES (CAD-FD)\STRUCTURAL\23-07-02- 22049 1-STRUCT (1AC)\22049-STD3.dwg
PLOT DATE: 07-02-24 PLOTTED BY: Francisco

SHEAR WALL SCHEDULE

▬▬▬▬▬▬ DENOTES SHEAR WALL. SEE PLAN FOR LOCATION

SHEAR WALL	PANEL NAILING AND MATERIALS	SILL PLATE NAILING (FLOOR)	SIMPSON A35 BETWEEN BLK'G OR RIM MEMBER & TOP PLATE
1	1/2" CDX PLYWD. W/8d @ 6" O.C. EDGES & 12" O.C. FIELD	16d @ 6" O.C.	A35 @ 24" O.C.
2	1/2" CDX PLYWD. W/8d @ 4" O.C. EDGES & 12" O.C. FIELD	16d @ 4" O.C.	A35 @ 18" O.C.

HORIZONTAL DIAPHRAGMS

FLOORS: 3/4" CDX PLYWOOD WITH 10d COMMON NAILS @ 4" O.C. BOUNDARY, 6" O.C. EDGES, AND 10" O.C. FIELD. (UNBLOCKED UNLESS OTHERWISE NOTED ON PLANS)

IF 1 1/8" THICK PLYWOOD IS USED FOR FLOOR DIAPHRAGM, USE SIMPSON 1 1/4"Φx4 1/2" LONG SDS SCREWS AT SILL PLATE NAILING FOR SHEARWALLS. (1) (2)

SHEAR WALL NOTES

1. ALL EXTERIOR WALLS SHALL HAVE 1/2" CDX PLYWOOD WITH SHEAR (1) NAILING UNLESS OTHERWISE NOTED ON PLANS.
2. ALL EXTERIOR AND INTERIOR CRIPPLE WALLS SHALL HAVE 1/2" CDX PLYWOOD WITH SHEAR (1) NAILING UNLESS OTHERWISE NOTED ON PLANS.
3. ALTERNATE TO CDX PLYWOOD, USE ORIENTED STRANDED BOARD (OSB).
4. ALL SHEARWALL NAILING SHALL BE COMMON NAILS.

LEGEND AND NOTES (ROOF/DECK)

ROOF RAFTERS : 2x12 O.C No. 2 OR BETTER AT 12" O.C., TYP. (U.O.N.)

CEILING JOIST : 2x6 D.F. No. 2 AT 16" O.C. (MAX. SPAN 14'-0") OR 2x8 D.F. No. 2 AT 24" O.C. (MAX. SPAN 16'-0")

HEADERS: 4" WALL – 4x10 D.F. NO.1 OR BETTER, TYP. (U.O.N.)
6" WALL – 6x10 D.F. NO.1 OR BETTER, TYP. (U.O.N.)

DENOTES FLUSH OR DROP BEAMS: (SEE FRAMING PLAN FOR SIZES & LOCATION)
–DIMENSIONAL LUMBER: D.F. No. 1, TYP. (U.O.N.)
–STRUCTURAL COMPOSITE LUMBER: ICC No. ESR 1387
MICROLAM LAMINATED VENEER LUMBER (LVL) E=2.0 x 10^6 PSI
PARALLAM PARALLEL STRAND LUMBER (PSL) E=2.2 x 10^6 PSI

LEDGER 2x12 D.F. No. 1 OR BETTER W/(3)–16 O.C EA. STUD, TYP. (U.O.N.)

DENOTES 4x OR 6x POST, SEE PLAN

SIMPSON STEEL STRONG WALL (SSW) ICC ESR-1679
FIELD VERIFY ALL FIELD DIMENSIONS AGAINST PANEL DIMENSIONS AND DETAIL INSTALLATION PRIOR TO POURING THE FOUNDATION AND ORDERING PANELS.
SEE DETAIL 10/S2

LEGEND AND NOTES (FOUNDATION)

FLOOR JOIST: 2x6 D.F. No. 2 OR BETTER AT 16" O.C., TYP. (U.O.N.)

NOTE:
PROVIDE DBL JOIST UNDER PARALLEL NON-BEARING PARTITION WALL ABOVE AND 2x BLOCKING UNDER PERPENDICULAR NON-BEARING PARTITION WALL ABOVE.

DECK JOIST: 2x6 P.T.D.F. No. 2 OR BETTER AT 16" O.C., TYP. (U.O.N.)

EXISTING 14" CONTINUOUS FOOTING

15" WIDE CONTINUOUS FOOTING WITH 3-NO.4 BARS 1-TOP AND 2-BOTTOM W/ NO.4 VERTICAL BAR AT 24" O.C.

DENOTES 4x6 GIRDER D.F. NO.1 OR BETTER W/CONCRETE SPREAD FOOTING,SEE PLAN FOR SIZES AND REINF.
SEE DETAIL 5/S2

LEDGER TO WOOD RIM OR SOLID BLK'G:
-2x D.F. No. 1 OR BETTER W/ (2) ¼"X3½" SDS (GALV.) SCREW AT 16" O.C., TYP. (U.O.N.)

HDU DENOTES SIMPSON HDU HOLDOWNS, NEW FOOTING : SEE DETAIL 6/S2

PFA DENOTES POST FROM ABOVE

S.A.D. DENOTES CHANGE IN GRADE SEE ARCH'L PLANS

ANCHOR BOLT SCHEDULE:

NEW FOOTING : USE 3x P.T.D.F. SILL WITH ⅝"Φx12" A.B.'S (GALV.) AT 48" O.C. (MIN. 2 BOLTS PER SILL)
(USE 3"x3"x¼" STEEL PLATE WASHERS (GALV.) TYPICAL, (U.O.N.)

FASTENERS FOR PRESSURE-PRESERVATIVE TREATED AND FIRE-RETARDANT TREATED WOOD SHALL BE OF HOT-DIPPED ZINC COATED GALVANIZED, STAINLESS STEEL, SILICON BRONZE OR COPPER. CBC 2304.9.5

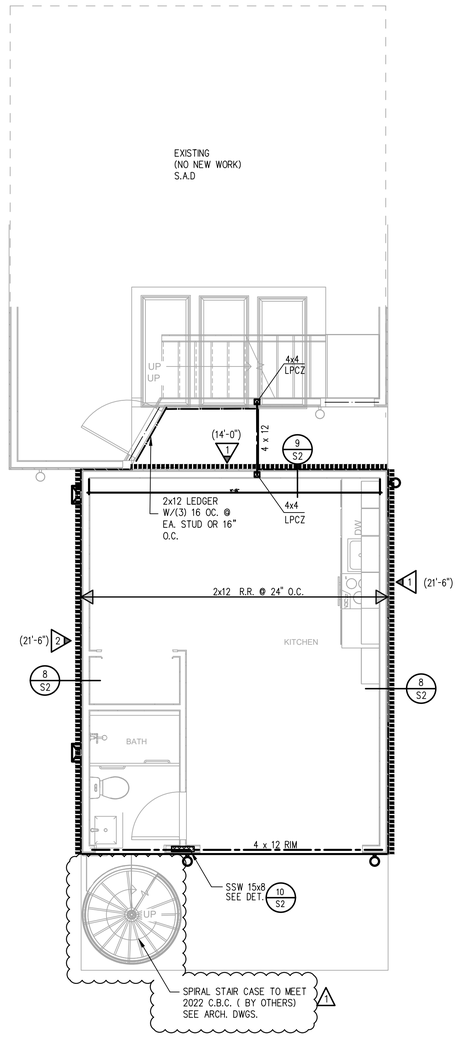

ROOF/DECK FRAMING

SCALE 1/4" = 1'-0"

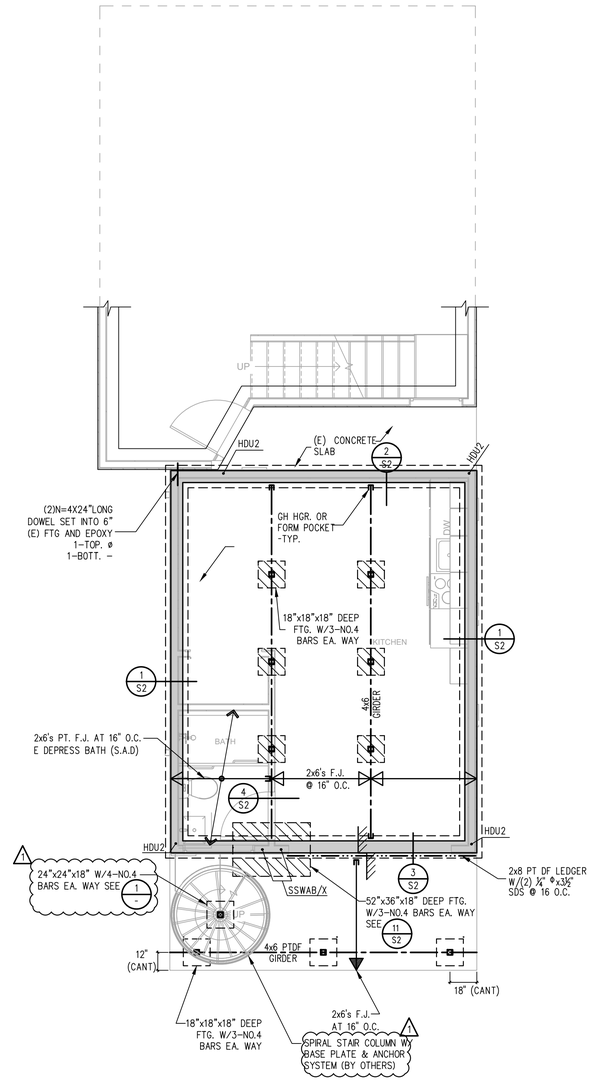

FOUNDATION PLANS

SCALE 1/4" = 1'-0"

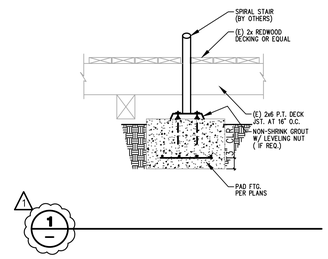

NOTE:
ALL INDICATED DIMENSION SHALL TAKE PRECEDENCE OVER ANY SCALE MEASUREMENTS. DO NOT SCALE DRAWINGS.

REFER TO ARCHITECTURAL DRAWINGS FOR DIMENSIONS AND CRAWL SPACE VENTILATION.

REGISTERED PROFESSIONAL ENGINEER
FRANCISCO M. DIAZ
No. 69094
Exp.06–30–26
CIVIL
STATE OF CALIFORNIA

FMD ENGINEERING, INC.
CIVIL ENGINEERS
32108 ALVARADO BLVD. # 340
UNION CITY, CA. 94587
OFFICE (310) 475-8260
e-mail : fdiaz@fmdengr.com

AKD HOMES
763 LAKEVIEW AVENUE
SAN FRANCISCO, CA 94112

REVISIONS/DATE	BY
1 ARCH. REV./PC 05/24/2023	FD-01

APPROVED
Dept. of Building Insp.
-San Francisco-
08/06/2024

Engineer: FD
Drafter: FD-01
Date: 05/06/2022
Scale: AS NOTED
Job No: 22049

SHEET
S1

DRAWING NAME:: C:\FMDV0 DRIVE\PROJECTS\2022\22049- AKD HOMES (CAD-FD)\STRUCTURAL\23-07-02- 22049 1-STRUCT (1AC)\22049-S1.dwg
PLOT DATE:: 07-02-24 PLOTTED BY:: Francisco

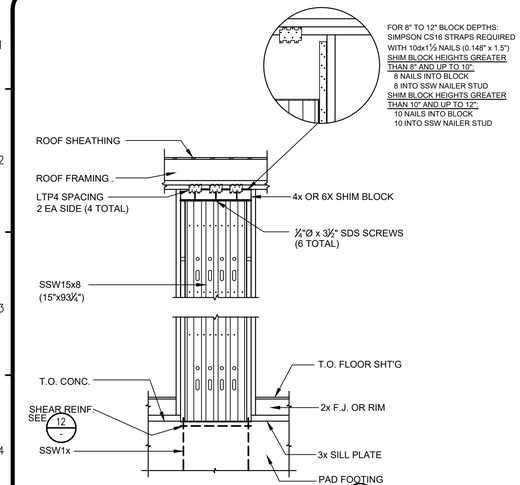

10

REQUIRED FLASHNG AND WATER PROOFING AT NEW WALL PER ARCH. DWGS

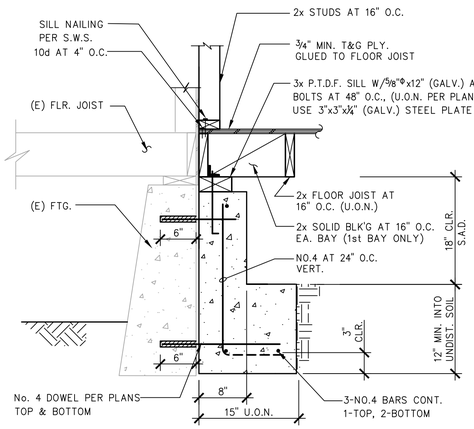

7

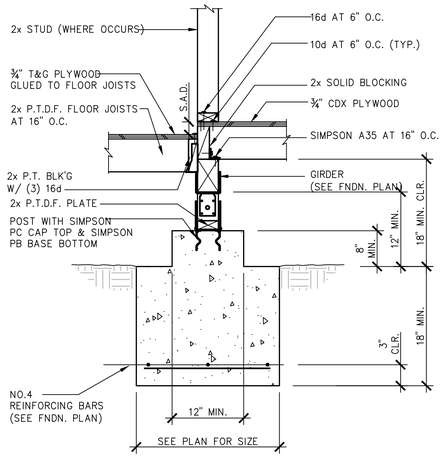

4

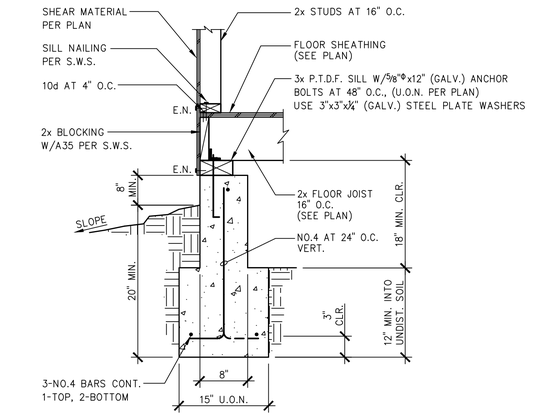

1

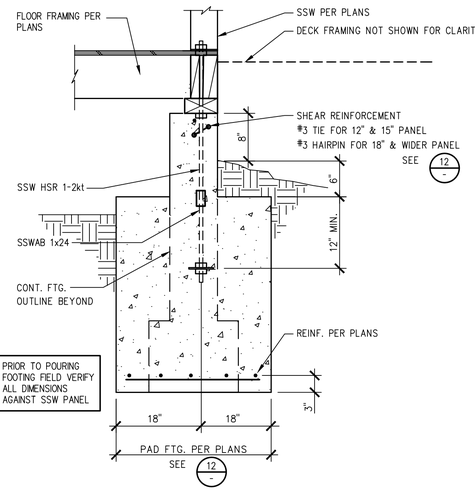

11

CONTRACTOR TO PROVIDE SLOPE FOR DECK DRIANAGE (DO NOT SLOPE CUT RAFTERS)

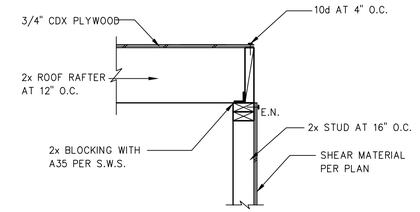

8

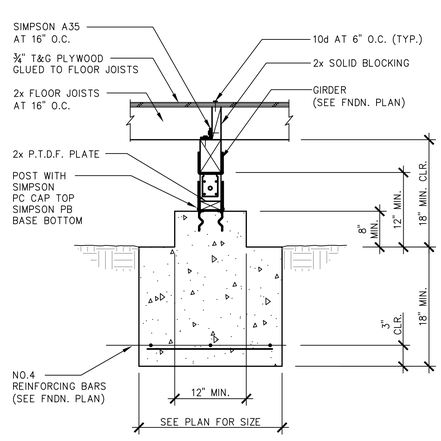

5

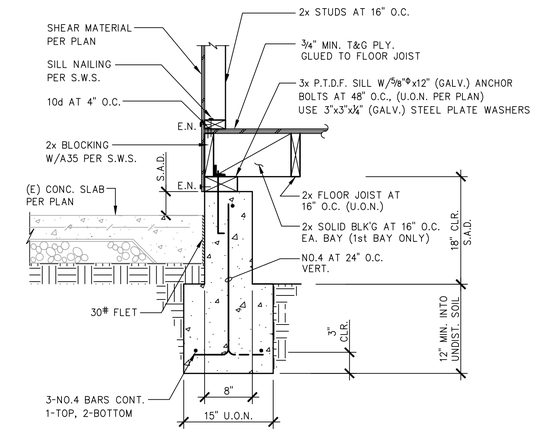

2

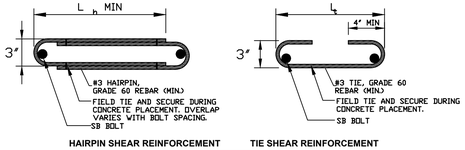

HAIRPIN SHEAR REINFORCEMENT **TIE SHEAR REINFORCEMENT**

MODEL NO.	Lt or Ln	SHEAR REINF.
SSW12	9	(1) #3 TIE
SSW15	12	(2) #3 TIE
SSW18	14	(1) #3 HAIRPIN
SSW21	15	(2) #3 HAIRPIN

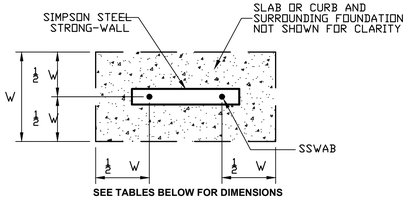

SEE TABLES BELOW FOR DIMENSIONS

MODEL NO.	SSWAB	W
SSW12	3/4"	25" MIN.
SSW15 SSW18 SSW21	1"	36" MIN

12

CONTRACTOR TO PROVIDE SLOPE FOR DECK DRIANAGE (DO NOT SLOPE CUT RAFTERS)

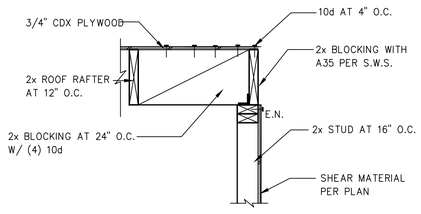

9

HDU HOLDOWN SCHEDULE				
HOLDOWN TYPE *	SB BOLT **	ANCHOR DIAMETER	SDS SCREWS TO POST	EMBEDMENT (2500 PSI CONCRETE)
HDU2	SB⅝x24	⅝"	6	18" MIN.
HDU4	SB⅝x24	⅝"	10	18" MIN.
HDU5	SB⅝x24	⅝"	14	18" MIN.
HDU8	SB⅞x24	⅞"	20	18" MIN.

* ICC ESR-2330 ** ICC ESR-2611

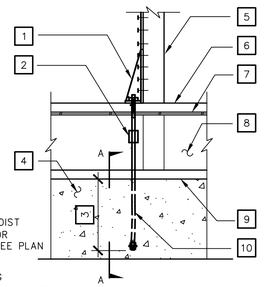

1. HDU HOLDOWN, SEE SCHEDULE FOR SCREWS TO STUD
2. THREADED ROD & COUPLER
3. EMBEDMENT
4. FOOTING
5. 4x4 MIN. STUD TO BE LOCATED AT OR NEAR END OF SHEAR WALL AND TO RECEIVE END NAILING
6. 2x SOLE PLATE
7. PLYWOOD SUBFLOOR
8. 2-2x RIM JOISTS OR DBL BLOCK AT JOIST UNDER POST (IF APPLY, SEE PLAN) OR DBL. BLOCK OR 4X OR 6X POST OR SEE PLAN
9. P.T.D.F. SILL, SEE FOUNDATION PLAN FOR ANCHOR BOLT SIZE AND SPACING
10. SIMPSON SB ANCHORS FOR HOLDOWNS, SEE SCHEDULE ABOVE FOR EMBEDMENT LENGTH AND BOLT SIZE

6

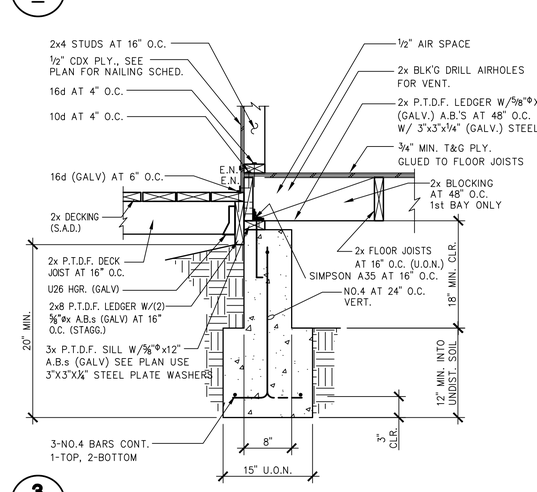

3

REGISTERED PROFESSIONAL ENGINEER
FRANCISCO M. DUARTE
No. 59094
Exp:06-30-26
CIVIL
STATE OF CALIFORNIA

FMD ENGINEERING, INC.
CIVIL ENGINEERS
32108 ALVARADO BLVD. # 340
UNION CITY, CA. 94587
OFFICE (510) 475-8290
e-mail : fduarte@fmdengr.com

AKD HOMES
763 LAKEVIEW AVENUE
SAN FRANCISCO, CA 94112

REVISIONS/DATE	BY
1 ARCH. REV./PC 05/24/2023	FD-01

APPROVED
Dept. of Building Insp.
-San Francisco-
08/06/2024

Engineer: FD
Drafter: FD-01
Date: 05/06/2022
Scale: AS NOTED
Job No: 22049

SHEET
S2

DRAWING NAME: C:\FMD\0_DRIVE\PROJECTS\2022\22049- AKD HOMES (CAD-FD)\STRUCTURAL\23-07-02- 22049 1-STRUCT (1AC)\22049-S2.dwg
PLOT DATE: 07-03-24 PLOTTED BY: Francisco

GENERAL INFORMATION

01	Project Name	763 LAKEVIEW AVE. ADU			
02	Run Title	New Construction			
03	Project Location	763 LAKEVIEW AVE.			
04	City	San Francisco, CA	05	Standards Version	2019
06	Zip code	94112	07	Software Version	CBECC-Res 2019.2.0
08	Climate Zone	3	09	Front Orientation (deg/ Cardinal)	180
10	Building Type	Single family	11	Number of Dwelling Units	1
12	Project Scope	NewConstruction	13	Number of Bedrooms	1
14	Addition Cond. Floor Area (ft^2)	0	15	Number of Stories	1
16	Existing Cond. Floor Area (ft^2)	n/a	17	Fenestration Average U-factor	0.3
18	Total Cond. Floor Area (ft^2)	374	19	Glazing Percentage (%)	19.25%
20	ADU Bedroom Count	n/a	21	ADU Conditioned Floor Area	n/a
22	Is Natural Gas Available?	Yes			

COMPLIANCE RESULTS

01	Building Complies with Computer Performance
02	This building incorporates features that require field testing and/or verification by a certified HERS rater under the supervision of a CEC-approved HERS provider.
03	This building incorporates one or more Special Features shown below

ENERGY DESIGN RATING

	Energy Design Ratings		Compliance Margins	
	Efficiency[1] (EDR)	Total[2] (EDR)	Efficiency[1] (EDR)	Total[2] (EDR)
Standard Design	63.6	31.5		
Proposed Design	62.1	14.6	1.5	16.9
RESULT: [3] COMPLIES				

1: Efficiency EDR includes improvements to the building envelope and more efficient equipment
2: Total EDR includes efficiency and demand response measures such as photovoltaic (PV) systems and batteries
3: Building complies when efficiency and total compliance margins are greater than or equal to zero

- Standard Design PV Capacity: 1.56 kWdc
- Proposed PV system downsized to 2.34 kWdc (a factor of 0.779) due to cap of 1 x proposed design electricity use

ENERGY USE SUMMARY

Energy Use (kTDV/ft^2-yr)	Standard Design	Proposed Design	Compliance Margin	Percent Improvement
Space Heating	10.54	6.67	3.87	36.7
Space Cooling	10.92	10.52	0.4	3.7
IAQ Ventilation	13.49	17.98	-4.49	-33.3
Water Heating	72.7	64.81	7.89	10.9
Self Utilization/Flexibility Credit	n/a	0	0	n/a
Compliance Energy Total	**107.65**	**99.98**	**7.67**	**7.1**

REQUIRED PV SYSTEMS - SIMPLIFIED

01	02	03	04	05	06	07	08	09	10	11	12
DC System Size (kWdc)	Exception	Module Type	Array Type	Power Electronics	CFI	Azimuth (deg)	Tilt Input	Array Angle (deg)	Tilt: (x in 12)	Inverter Eff. (%)	Annual Solar Access (%)
2.34	NA	Standard	Fixed	none	true	150-270	n/a	n/a	<=7:12	96	98

REQUIRED SPECIAL FEATURES

The following are features that must be installed as condition for meeting the modeled energy performance for this computer analysis.

- PV System: 2.34 kWdc
- Indoor air quality, balanced fan
- IAQ Ventilation System: as low as 0.5 W/CFM
- IAQ Ventilation System Heat Recovery: minimum 78 SRE and 78 ASRE
- IAQ Ventilation System: supply outside air inlet, filter, and H/ERV cores accessible per RACM Reference Manual
- Floor has high level of insulation
- Ducts in crawl space
- Northwest Energy Efficiency Alliance (NEEA) rated heat pump water heater; specific brand/model, or equivalent, must be installed

HERS FEATURE SUMMARY

The following is a summary of the features that must be field-verified by a certified HERS Rater as a condition for meeting the modeled energy performance for this computer analysis. Additional detail is provided in the building tables below. Registered CF2Rs and CF3Rs are required to be completed in the HERS Registry

Building-level Verifications:
- Indoor air quality ventilation
- Kitchen range hood

Cooling System Verifications:
- Minimum Airflow
- Fan Efficacy Watts/CFM

Heating System Verifications:
- Verified heat pump rated heating capacity

HVAC Distribution System Verifications:
- Duct leakage testing

Domestic Hot Water System Verifications:
- -- None --

BUILDING - FEATURES INFORMATION

01	02	03	04	05	06	07
Project Name	Conditioned Floor Area (ft^2)	Number of Dwelling Units	Number of Bedrooms	Number of Zones	Number of Ventilation Cooling Systems	Number of Water Heating Systems
763 LAKEVIEW AVE. ADU	374	1	1	1	0	1

ZONE INFORMATION

01	02	03	04	05	06	07
Zone Name	Zone Type	HVAC System Name	Zone Floor Area (ft^2)	Avg. Ceiling Height	Water Heating System 1	Water Heating System 2
New ADU	Conditioned	HVAC System 1	374	8	DHW System 1	N/A

OPAQUE SURFACES

01	02	03	04	05	06	07	08
Name	Zone	Construction	Azimuth	Orientation	Gross Area (ft^2)	Window and Door Area (ft2)	Tilt (deg)
Exterior Wall 1	New ADU	2x6 R21 Walls	180	Front	168	72	90
Exterior Wall 2	New ADU	2x6 R21 Walls	90	Right	140	0	90
Exterior Wall 3	New ADU	2x6 R21 Walls	0	Back	168	0	90
Exterior Wall 4	New ADU	2x6 R21 Walls	270	Left	140	0	90
Floor Over Crawlspace 1	New ADU	R19 Floor Over Crawl	n/a	n/a	299	n/a	n/a

OPAQUE SURFACES - CATHEDRAL CEILINGS

01	02	03	04	05	06	07	08	09	10	11
Name	Zone	Construction	Azimuth	Orientation	Area (ft^2)	Skylight Area (ft^2)	Roof Rise (x in 12)	Roof Reflectance	Roof Emittance	Cool Roof
Flat Roof R30	New ADU	R30 Roof	270	Left	299	0	0.01	0.1	0.85	No

FENESTRATION / GLAZING

01	02	03	04	05	06	07	08	09	10	11	12	13	14
Name	Type	Surface	Orientation	Azimuth	Width (ft)	Height (ft)	Mult.	Area (ft^2)	U-factor	U-factor Source	SHGC	SHGC Source	Exterior Shading
D1	Window	Exterior Wall 1	Front	180	9	8	1	72	0.3	NFRC	0.35	NFRC	Bug Screen

OPAQUE SURFACE CONSTRUCTIONS

01	02	03	04	05	06	07	08
Construction Name	Surface Type	Construction Type	Framing	Total Cavity R-value	Interior / Exterior Continuous R-value	U-factor	Assembly Layers
2x6 R21 Walls	Exterior Walls	Wood Framed Wall	2x6 @ 16 in. O. C.	R-21	None / None	0.065	Inside Finish: Gypsum Board Cavity / Frame: R-21 / 2x6 Sheathing / Insulation: Wood Siding/sheathing/decking Exterior Finish: 3 Coat Stucco
R30 Roof	Cathedral Ceilings	Wood Framed Ceiling	2x12 @ 16 in. O. C.	R-30	None / None	0.036	Roofing: Light Roof (Asphalt Shingle) Roof Deck: Wood Siding/sheathing/decking Cavity / Frame: R-30 / 2x12 Inside Finish: Gypsum Board
R19 Floor Over Crawl	Floors Over Crawlspace	Wood Framed Floor	2x8 @ 16 in. O. C.	R-30	None / None	0.037	Floor Surface: Hardwood Floor Deck: Wood Siding/sheathing/decking Cavity / Frame: R-30 / 2x8

BUILDING ENVELOPE - HERS VERIFICATION

01	02	03	04
Quality Insulation Installation (QII)	High R-value Spray Foam Insulation	Building Envelope Air Leakage	CFM50
Not Required	Not Required	Not Required	n/a

WATER HEATING SYSTEMS

01	02	03	04	05	06	07
Name	System Type	Distribution Type	Water Heater Name (#)	Solar Heating System	Compact Distribution	HERS Verification
DHW System 1	Domestic Hot Water (DHW)	Standard Distribution System	Water Heater 1 (1)	n/a	None	n/a

WATER HEATERS

01	02	03	04	05	06	07	08	09	10	11	12
Name	Heating Element Type	Tank Type	# of Units	Tank Vol. (gal)	Energy Factor or Efficiency	Input Rating or Pilot	Tank Insulation R-value (Int/Ext)	Standby Loss or Recovery Eff	1st Hr. Rating or Flow Rate	NEEA Heat Pump Brand or Model	Tank Location or Ambient Condition
Water Heater 1	Heat Pump	n/a	1	40	NEEA Rated	<= 12 kW	n/a	n/a	n/a	Generic\NEEA Tier 3 Generic 40	Outside

WATER HEATING - HERS VERIFICATION

01	02	03	04	05	06	07	08
Name	Pipe Insulation	Parallel Piping	Compact Distribution	Compact Distribution Type	Recirculation Control	Central DHW Distribution	Shower Drain Water Heat Recovery
DHW System 1 - 1/1	Not Required	Not Required	Not Required	None	Not Required	Not Required	Not Required

SPACE CONDITIONING SYSTEMS

01	02	03	04	05	06	07	08	09	10	11
Name	System Type	Heating Unit Name	Cooling Unit Name	Fan Name	Distribution Name	Required Thermostat Type	Status	Verified Existing Condition	Heating Equipment Count	Cooling Equipment Count
HVAC System 1	Heat pump heating cooling	Heat Pump System 1	Heat Pump System 1	HVAC Fan System 1	Distribution System 1	Setback	New	NA	1	1

HVAC - HEAT PUMPS

01	02	03	04	05	06	07	08	09	10	11
Name	System Type	Number of Units	Heating			Cooling		Zonally Controlled	Compressor Type	HERS Verification
			HSPF/COP	Cap 47	Cap 17	SEER	EER/CEER			
Heat Pump System 1	Central split HP	1	8.2	24000	17000	14	11.7	Not Zonal	Single Speed	Heat Pump System 1-hers-htpump

APPROVED
Dept. of Building Insp.
-San Francisco-
08/06/2024

DOCUMENTATION AUTHOR'S DECLARATION STATEMENT	
1. I certify that this Certificate of Compliance documentation is accurate and complete.	
Documentation Author Name: Sean Feurtado	Documentation Author Signature: Sean Feurtado
Company: Quest Energy Design	Signature Date: 2022-05-17 18:20:55
Address: 1700 North 1st St #252	CEA/ HERS Certification Identification (If applicable): R16-19-20160
City/State/Zip: San Jose, CA 95112	Phone: 408-896-6018 8966018

RESPONSIBLE PERSON'S DECLARATION STATEMENT	
I certify the following under penalty of perjury, under the laws of the State of California: 1. I am eligible under Division 3 of the Business and Professions Code to accept responsibility for the building design identified on this Certificate of Compliance. 2. I certify that the energy features and performance specifications identified on this Certificate of Compliance conform to the requirements of Title 24, Part 1 and Part 6 of the California Code of Regulations. 3. The building design features or system design features identified on this Certificate of Compliance are consistent with the information provided on other applicable compliance documents, worksheets, calculations, plans and specifications submitted to the enforcement agency for approval with this building permit application.	
Responsible Designer Name: Sean Feurtado	Responsible Designer Signature: Sean Feurtado
Company: Quest Energy Design	Date Signed: 2022-05-17 18:20:55
Address: 1700 North 1st St #252	License: n/a
City/State/Zip: San Jose, CA 95112	Phone: 408-896-6018 8966018

Digitally signed by CalCERTS. This digital signature is provided in order to secure the content of this registered document, and in no way implies Registration Provider responsibility for the accuracy of the information.

Easy to Verify at CalCERTS.com

HVAC HEAT PUMPS - HERS VERIFICATION

01	02	03	04	05	06	07	08	09
Name	**Verified Airflow**	**Airflow Target**	**Verified EER**	**Verified SEER**	**Verified Refrigerant Charge**	**Verified HSPF**	**Verified Heating Cap 47**	**Verified Heating Cap 17**
Heat Pump System 1-hers-htpump	Required	350	Not Required	Not Required	No	No	Yes	Yes

HVAC - DISTRIBUTION SYSTEMS

01	02	03	04	05	06	07	08	09	10	11	12
			Duct Ins. R-value		Duct Location		Surface Area				
Name	**Type**	**Design Type**	**Supply**	**Return**	**Supply**	**Return**	**Supply**	**Return**	**Bypass Duct**	**Duct Leakage**	**HERS Verification**
Distribution System 1	Unconditioned crawl space	Non-Verified	R-6	R-6	Crawl Space	Crawl Space	n/a	n/a	No Bypass Duct	Sealed and Tested	Distribution System 1-hers-dist

HVAC DISTRIBUTION - HERS VERIFICATION

01	02	03	04	05	06	07	08	09
Name	**Duct Leakage Verification**	**Duct Leakage Target (%)**	**Verified Duct Location**	**Verified Duct Design**	**Buried Ducts**	**Deeply Buried Ducts**	**Low-leakage Air Handler**	**Low Leakage Ducts Entirely in Conditioned Space**
Distribution System 1-hers-dist	Yes	5.0	Not Required	Not Required	Not Required	Credit not taken	Not Required	No

HVAC - FAN SYSTEMS

01	02	03	04
Name	**Type**	**Fan Power (Watts/CFM)**	**Name**
HVAC Fan System 1	HVAC Fan	0.3	HVAC Fan System 1-hers-fan

HVAC FAN SYSTEMS - HERS VERIFICATION

01	02	03
Name	**Verified Fan Watt Draw**	**Required Fan Efficacy (Watts/CFM)**
HVAC Fan System 1-hers-fan	Required	0.3

IAQ (INDOOR AIR QUALITY) FANS

01	02	03	04	05	06	07
Dwelling Unit	**IAQ CFM**	**IAQ Watts/CFM**	**IAQ Fan Type**	**IAQ Recovery Effectiveness - SRE**	**IAQ Recovery Effectiveness - ASRE**	**HERS Verification**
5Fam IAQVentRpt 1-1	50	0.5	Balanced	78	78	Yes

APPROVED
Dept. of Building Insp.
-San Francisco-
08/06/2024